The Canadian Mineralogist
Vol. 60, pp. 341-359 (2022)
DOI: 10.3749/canmin.2100051

BONDING BETWEEN THE DECAVANADATE POLYANION AND THE INTERSTITIAL COMPLEX IN PASCOITE-FAMILY MINERALS

FRANK C. HAWTHORNE

Department of Earth Sciences, University of Manitoba, 125 Dysart Road, Winnipeg, Manitoba R3T 2N2, Canada

JOHN M. HUGHES[§]

Department of Geology, Delehanty Hall, University of Vermont, Trinity Campus, 180 Colchester Ave., Burlington, Vermont 05405-1758, USA

MARK A. COOPER

Department of Earth Sciences, University of Manitoba, 125 Dysart Road, Winnipeg, Manitoba R3T 2N2, Canada

ANTHONY R. KAMPF

Mineral Sciences Department, Natural History Museum of Los Angeles County, 900 Exposition Boulevard, Los Angeles, California 90007, USA

ABSTRACT

The decavanadate isopolyanion, $[V_{10}O_{28}]^{6-}$, is a constituent of pascoite-family vanadate minerals and synthetic materials, and both protonated, $[H_xV_{10}O_{28}]^{(6-x)-}$, and mixed-valence, $[V^{4+}{}_xV^{5+}{}_{10-x})O_{28}]^{(6+x)-}$, varieties have been described. Here we analyze the interaction between the interstitial complex and the decavanadate structural unit using the principle of correspondence of Lewis acidity-basicity. The Lewis base strengths of the decavanadate polyanions vary from 0.054 to 0.154 *vu* and $[V_{10}O_{28}]$ structures can form from the simple cations Cs^+, Rb^+, K^+, Tl^+, and Na^+; simple cations with higher Lewis acidities are too acid to form structures. Cations may bond to transformer (H_2O) groups to form polyatomic cations that have lower Lewis acidities than the corresponding simple cation. The occurrence of the polyatomic cation $\{(V^{5+}O_2)Al_{10}(OH)_{20}(H_2O)_{18}\}^{11+}$ in caseyite shows the potential for decavanadate phases to incorporate large heteropolycations into their structures. In turn, this suggests that the $[V_{10}O_{28}]$ polyanions may be used to induce co-crystallization of large aqueous polyatomic cations, thus facilitating their structural characterization. There is an inverse relation between the amount of (H_2O) in the interstitial complex and the number of bonds between interstitial simple cations and the O^{2-} ions of the vanadate units, and there is a strong correlation between the unit-cell volume per decavanadate unit and the number of (H_2O) groups.

Keywords: decavanadate, bond-valence theory, Lewis acid, Lewis base, interstitial complex.

INTRODUCTION

Polyoxometalates are compounds that contain a cluster or clusters, usually anionic, of three or more transition-metal-centered polyhedra that are linked by sharing O^{2-} ions between the polyhedra. Synthetic polyoxometalates are extremely important in Chemistry and Materials Science; the interest in such compounds is indicated by the number of papers and patents on these phases, which has increased logarithmically since the early 1990s (*e.g.*, Katsoulis 1998, Hutin *et al*. 2013). Such phases have numerous applications that include coatings, gas sorbents, sensors, dyes, capacitors, cation exchangers, and anti-tumor agents; more recently, polyoxometalates have been used as antiviral agents, as cancer antagonists, in the treatment for Alzheimer's disease,

[§] *Corresponding author e-mail address*: jmhughes@uvm.edu

Downloaded from http://pubs.geoscienceworld.org/canmin/article-pdf/60/2/341/5579492/i1499-1276-60-2-341.pdf?casa_token=5vtN9F2UacIAAAAA:0IujIDr-RUgSWmTo078dd4CLNq
by University of Arizona user

and in nanomagnetism, with applications to semiconductors and quantum computing.

In the last decade, investigation of post-mining minerals in the U-V mines of the Colorado Plateau and its environs have resulted in numerous new minerals, many of which are polyoxometalates. The minerals occur in or adjacent to the Uravan mineral belt, an arcuate 120 km-long belt that has been a productive source of U and V ores in the twentieth century. The numerous deposits of the Uravan mineral belt are roll-front deposits in the Salt Wash sandstone of the Morrison Formation (Carter & Gualtieri 1965, Shawe 2011). The most common polyoxometalate minerals from the Colorado Plateau are based on the $[V_{10}O_{28}]^{n-}$ isopolyanion in one or more of its four forms: (1) the $[V^{5+}{}_{10}O_{28}]^{6-}$ group, (2) its protonated derivative $[H_xV^{5+}{}_{10}O_{28}]^{(6-x)-}$, (3) the mixed-valence $[(V^{4+}{}_xV^{5+}{}_{10-x})O_{28}]^{(6+x)-}$ group, and (4) the protonated mixed-valence $[H^+{}_y(V^{4+}{}_xV^{5+}{}_{10-x})O_{28}]^{(6+x-y)-}$ group. Since 2008, the number of decavanadate minerals has grown from three to 21, with all of the new species originating from U-V mines of the Uravan mineral belt (and adjacent areas) of the Colorado Plateau of western Colorado and eastern Utah, USA. Recently, we refined the determination of V^{4+}:V^{5+} ratios in the $[V_{10}O_{28}]^{n-}$ decavanadate polyanion (Cooper *et al.* 2019a) and developed criteria for reliably identifying protonated decavanadate polyanions (Cooper *et al.* 2019b). Here, we examine bonding between the decavanadate unit and the interstitial complex in the decavanadate minerals of Table 1. Bond valences involving interstitial cations were calculated using the parameters of Gagné & Hawthorne (2015).

The $[V_{10}O_{28}]$ Decavanadate Unit

The decavanadate unit in Figure 1 shows the atom nomenclature used throughout this work. The bond nomenclature in Figure 1 was introduced by Schindler *et al.* (2000a, b) and was used by Cooper *et al.* (2019a). The $[V_{10}O_{28}]^{6-}$ decavanadate unit ideally has 2/*m*2/*m*2/*m* symmetry, with the inversion center midway between V1 and V1′ in Figure 1. As noted by Evans (1966), it seems reasonable that the free polyanion has orthorhombic symmetry and that deviations from that symmetry arise only from the influence of neighboring ions and groups. In 2/*m*2/*m*2/*m*, there are seven groups of symmetry-equivalent O^{2-} ions (Day *et al.* 1987) and three groups of symmetry-equivalent V^{n+} ions (Table 2). The bonding environments for all ions within a group are identical *within* the decavanadate unit, except for minor perturbations that arise from external interactions that differ from structure to structure.

Evans & Garrels (1958) showed that several V-bearing oxyanions may be present in mineralizing solutions, depending on the Eh and pH of those solutions. At relatively high Eh, the decavanadate anion, $[V^{5+}{}_{10}O_{28}]^{6-}$, is stable at mildly acidic conditions, whereas its protonated derivatives, $[H_xV_{10}O_{28}]^{(6-x)-}$, occur at lower pH. Under more reducing conditions, conducive to the presence of both V^{4+} and V^{5+}, mixed-valence decavanadate anions, $[(V^{4+}{}_xV^{5+}{}_{10-x})O_{28}]^{(6+x)-}$, may occur.

In protonated decavanadates, the H^+ ions of the decavanadate polyanion are difficult to locate. In much previous work, the presence of H^+ ions has been invoked in order to maintain electroneutrality. Mixed V^{4+}/V^{5+} valence decavanadates are commonly blue-green (as opposed to orange, where V is entirely 5+) resulting from V^{4+}–V^{5+} intervalence charge transfer (IVCT); however, a relatively pale blue-green color will result from even minor (non-species-defining) amounts of V^{4+}. There are four types of decavanadate polyanion: (1) $[V^{5+}{}_{10}O_{28}]^{6-}$, (2) $[H_xV^{5+}{}_{10}O_{28}]^{(6-x)-}$, (3) $[(V^{4+}{}_xV^{5+}{}_{10-x})O_{28}]^{(6+x)-}$, and (4) $[H^+{}_y(V^{4+}{}_xV^{5+}{}_{10-x})O_{28}]^{(6+x-y)-}$. Recognition of these different variants is difficult for minerals in which disorder, poor crystallinity, and tiny crystals commonly hinder the acquisition of high-resolution structural data. However, Cooper *et al.* (2019a, b) gave a detailed analysis of the several extant sets of parameters for calculating bond-valence values for V–O bonds. They showed that for V^{5+}–O bonds, the bond-valence parameters of Brown & Altermatt (1985) give bond-valence sums of 4.95–5.10 *vu* in confirmed $[V^{5+}{}_{10}O_{28}]^{6-}$ polyanions. Of the various bond-valence parameters available, these adhere most closely to the valence-sum rule (Brown 2002, 2016), and thus we use these parameters here in all calculations for non-mixed-valent decavanadate units. Note that the mean of this range slightly overestimates the bond valence of V^{5+}–O bonds, a fact that will be important later in this paper.

Binary Structural Representation and the Valence-Matching Principle

Minerals containing decavanadate polyanions conform well to the idea of binary representation of a structure wherein a complicated structure is considered as two constituents, a strongly bonded (usually anionic) *structural unit* and a weakly bonded (usually cationic) *interstitial complex* (Hawthorne 1983), and we may look at the interaction between these two constituents using Lewis-acid–Lewis-base interactions. The Lewis-acid strength of a cation can be defined as the characteristic valence of the bonds formed by that cation, and the Lewis-base strength of

Downloaded from http://pubs.geoscienceworld.org/canmin/article-pdf/60/2/341/5579492/i1499-1276-60-2-341.pdf?casa_token=5vtN9F2UacIAAAAA:0IujIDr-RUgSWmTo078dd4CLNq
by University of Arizona user

TABLE 1. THE MINERALS OF THE PASCOITE FAMILY

Mineral species	Ideal formula	First reference; best structure reference
Decavanadates:		
Ammoniolasalite	$(NH_4)_2Mg_2[V_{10}O_{28}]\cdot 20H_2O$	Kampf *et al.* (2018)
Burroite	$(NH_4)_2Ca_2[V_{10}O_{28}]\cdot 15H_2O$	Kampf *et al.* (2017a)
Gunterite	$Na_4Ca[V_{10}O_{28}]\cdot 22H_2O$	Kampf *et al.* (2011a); Kampf *et al.* (2022)
Huemulite	$Na_4Mg[V_{10}O_{28}]\cdot 24H_2O$	Gordillo *et al.* (1966); Colombo *et al.* (2011)
Hughesite	$Na_3Al[V_{10}O_{28}]\cdot 22H_2O$	Rakovan *et al.* (2011)
Hummerite	$K_2Mg_2[V_{10}O_{28}]\cdot 16H_2O$	Weeks *et al.* (1951); Hughes *et al.* (2002)
Hydropascoite	$Ca_3[V_{10}O_{28}]\cdot 24H_2O$	Kampf *et al.* (2017b)
Kokinosite	$Na_2Ca_2[V_{10}O_{28}]\cdot 24H_2O$	Kampf *et al.* (2014a)
Lasalite	$Na_2Mg_2[V_{10}O_{28}]\cdot 20H_2O$	Hughes *et al.* (2008)
Magnesiopascoite	$Ca_2Mg[V_{10}O_{28}]\cdot 16H_2O$	Kampf & Steele (2008)
Okieite	$Mg_3[V_{10}O_{28}]\cdot 28H_2O$	Kampf *et al.* (2020b)
Pascoite	$Ca_3[V_{10}O_{28}]\cdot 17H_2O$	Hillebrand *et al.* (1914); Hughes *et al.* (2005)
Postite	$MgAl_2(OH)_2[V_{10}O_{28}]\cdot 27H_2O$	Kampf *et al.* (2012)
Protocaseyite	$[Al_4(OH)_6(H_2O)_{12}][V_{10}O_{28}]\cdot 8H_2O$	Kampf *et al.* (2021a)
Rakovanite	$(NH_4)_3Na_3[V_{10}O_{28}]\cdot 12H_2O$	Kampf *et al.* (2011b); Kampf *et al.* (2021b)
Schindlerite	$(NH_4)_4Na_2[V_{10}O_{28}]\cdot 10H_2O$	Kampf *et al.* (2013a); Kampf *et al.* (2016)
Wernerbaurite	$(NH_4)_2Ca_2[V_{10}O_{28}]\cdot 16H_2O$	Kampf *et al.* (2013a); Kampf *et al.* (2016)
Mixed-valence and protonated mixed-valence decavanadates		
Bluestreakite	$K_4Mg_2[(V^{4+}{}_2V^{5+}{}_8)O_{28}]\cdot 14H_2O$	Kampf *et al.* (2014b)
Caseyite	$[(V^{5+}O_2)Al_{7.5}(OH)_{15}(H_2O)_{13}]_2$ $[H_2V^{4+}V^{5+}{}_9O_{28}][V^{5+}{}_{10}O_{28}]_2\cdot 90H_2O$	Kampf *et al.* (2020a)
Nashite	$Na_3Ca_2[(V^{4+}V^{5+}{}_9)O_{28}]\cdot 24H_2O$	Kampf *et al.* (2013b)
Trebiskyite	$Na_3Mg_2[(Ti^{4+}V_9)O_{28}]\cdot 22H_2O$	Olds *et al.* (2020)

an anion can be defined as the characteristic valence of the bonds formed by that anion (Brown 2002, 2016). Lewis-base strengths for simple anions show too large a range in variation to be useful in examining structure. However, simple oxyanions, *e.g.*, $(SO_4)^{2-}$, $(SiO_4)^{4-}$, show a much more limited variation (*e.g.*, Brown 2009, Hawthorne 2012), and structure stability may be examined using the *valence-matching principle*: Stable structures will form where the Lewis-acid strength of the cation closely matches the Lewis-base strength of the anion (Brown 2002, 2016). The valence-matching principle deals with single ion–ion interactions whereas the structural unit and the interstitial complex are aggregations of ions and neutral species. If we can define a Lewis basicity for a structural unit and a Lewis acidity for an interstitial complex, we may look at the aggregate interaction between these units using the *principle of correspondence of Lewis acidity-basicity* (Hawthorne & Schindler 2008), a mean-field equivalent of the valence-matching principle.

Bond Valences Within the Decavanadate Unit

A detailed examination of bond valences within the decavanadate unit is necessary before we can evaluate the Lewis basicities and Lewis acidities of the structural units and the interstitial complexes. Values of the Lewis-acid strength of cations bonded to O^{2-} may be derived from observed crystal structures, and Lewis-acid strengths for simple cations bonded to O^{2-} in ~10,000 inorganic structures are given by Gagné & Hawthorne (2017).

Bond-valence variations within the $[V^{5+}{}_{10}O_{28}]^{6-}$ decavanadate unit

Bond distances and bond strengths for each of the V–O bonds for 14 $[V^{5+}{}_{10}O_{28}]^{6-}$ decavanadate minerals (60 V–O bonds for each decavanadate unit) are listed in Appendix 1[1]. The mean bond valence for the 10 (VO_6) octahedra in each mineral ranges from 5.00 to 5.07 *vu*, and the grand mean of all 140 (VO_6) octahedra is 5.037 *vu*; this small deviation from the value of 5.00 *vu* required by the valence-sum rule is similar to the values noted by Cooper *et al*. (2019a) and is well under 1%. However, although small, this deviation is important when summed over the entire

[1] Appendix 1 and other deposited data are available from the Depository of Unpublished Data on the MAC website (http://mineralogicalassociation.ca/) document "Decavanadate CM60, 21-00051."

Downloaded from http://pubs.geoscienceworld.org/canmin/article-pdf/60/2/341/5579492/i1499-1276-60-2-341.pdf?casa_token=5vtN9F2UacIAAAAA:0IujIDr-RUgSWmTo078dd4CLNq by University of Arizona user

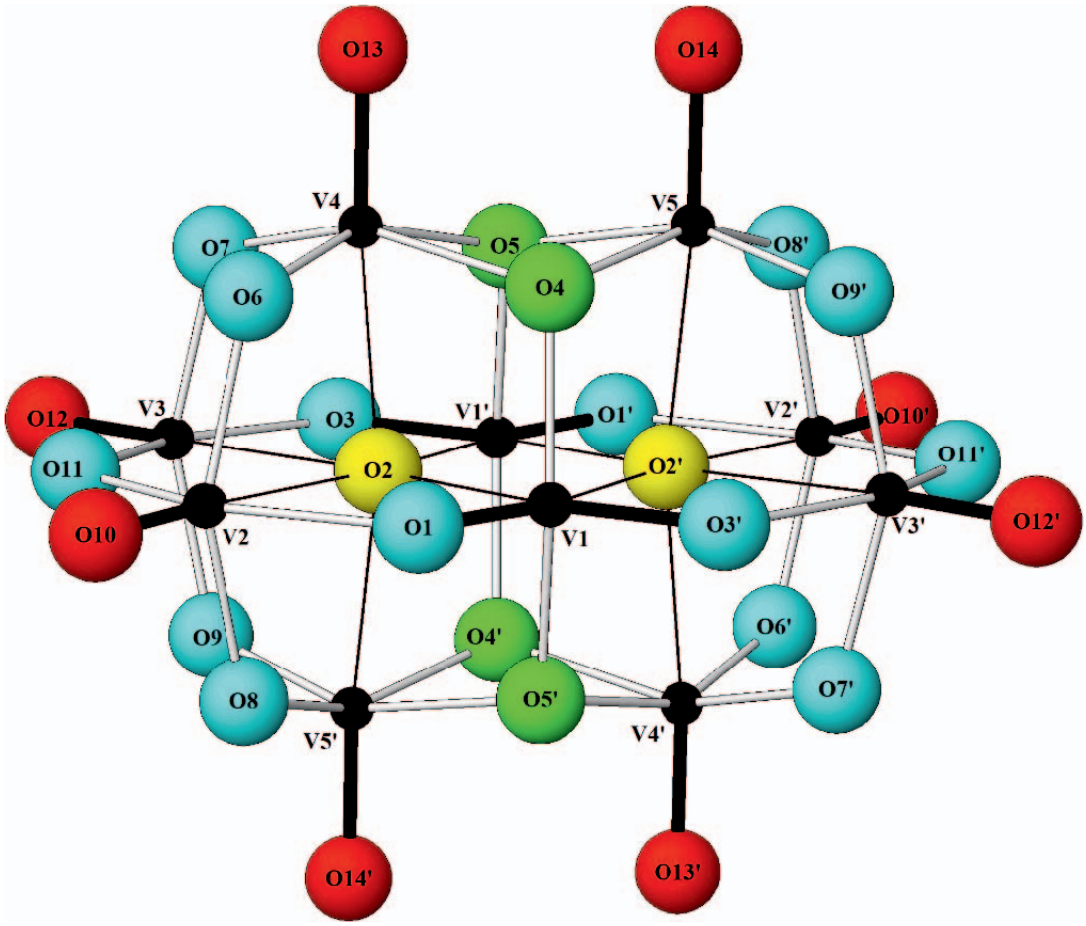

FIG. 1. The $[V_{10}O_{28}]^{6-}$ decavanadate polyanion. V atoms = black circles, [1]-coordinated O atoms = red circles, [2]-coordinated O atoms = blue circles, [3]-coordinated O atoms = green circles, [6]-coordinated O atoms = yellow circles, $V–O_{vanadyl}$ bonds = thick black line, $V–O_{trans}$ bonds = thin black line, $V–O_{equatorial}$ bonds = gray shaded line. Different ion groups (Table 2): A: yellow; B: green; C, D, E: blue; F, G: red. The nomenclature of the V and O atoms used throughout this work is shown here.

polyanion. For the $[V^{5+}{}_{10}O_{28}]^{6-}$ polyanion, the net formal charge is $5+ \times 10 + 2- \times 28 = 6-$. According to the valence-sum rule, the term $5+ \times 10$ may be replaced by the expression Σs_{ij} where the sum is over the bonds ($i = 1–6$) of the (VO_6) octahedra ($j = 1–10$) of the decavanadate polyanion: $6- = \Sigma s_{ij} + 56-$. The calculated values of Σs_{ij} are always greater than 50^+ (range = 50.02–50.67 *vu*), violating the valence-sum rule and lowering the apparent negative charge on the decavanadate unit. The mean charge for the 14 $[V^{5+}{}_{10}O_{28}]^{6-}$ decavanadate polyanions examined here is 5.63–, corresponding to a mean value of Σs_{ij} / 10 of 5.037 *vu*. The observed deviation from the ideal charge of 6.00– for the decavanadate polyanions is an artifact of the slight overestimation of the V–O bond valences discussed above. Slight *overestimation* of the V–O bond valences leads to slight *underestimation* of the incident bond-valence required from the interstitial species to satisfy electroneutrality. These bond-valence deficiencies for the 14 $[V^{5+}{}_{10}O_{28}]$ polyanions listed in Appendix 1 are in the range 5.33–5.98 *vu* and indicate that these polyanions lack V^{4+} and are unprotonated, the deficiencies arising from the bond-valence curve used slightly overestimating the V–O bond valences.

The bond-valence deficiency at each of the surface O^{2-} ions constrains the linkage to the interstitial species in decavanadate minerals. There are 28 O^{2-} ions in the decavanadate unit (Fig. 1); two of these anions (Group A) occur in the interior of the

Downloaded from http://pubs.geoscienceworld.org/canmin/article-pdf/60/2/341/5579492/i1499-1276-60-2-341.pdf?casa_token=5vtN9F2UacIAAAAA:0IujIDr-RUgSWmTo078dd4CLNq
by University of Arizona user

TABLE 2. SYMMETRY-EQUIVALENT GROUPS OF ATOMS IN THE $[V_{10}O_{28}]^{6-}$ DECAVANADATE UNIT WITH *mmm* SYMMETRY AND THE REMAINING BOND VALENCE FOR OXYGEN ATOMS AVAILABLE FOR BONDING TO THE INTERSTITIAL COMPLEX

Group*	Equivalent atoms	CN	Color in Fig. 1	Remaining <BV>
A	O2 = O2′	[6]	Yellow	0.040
B	O4 = O4′ = O5 = O5′	[3]	Green	0.110
E	O1 = O1′= O3 = O3′	[2]	Blue	0.133
D	O11 = O11′	[2]	Blue	0.165
C	O6 = O6′ = O7 = O7′ = O8 = O8′ = O9 = O9′	[2]	Blue	0.234
G	O10 = O10′ = O12 = O12′	[1]	Red	0.275
F	O13 = O13′ = O14 = O14′	[1]	Red	0.325
1	V1 = V1′	[2+2+2]	Black	
2	V2 = V2′ = V3 = V3′	[1+4+1]	Black	
3	V4 = V4′ = V5 = V5′	[1+4+1]	Black	

* Group designation from Day *et al.* (1987).

decavanadate unit and are not involved in bonding to the interstitial complex. Four other equivalent O^{2-} ions are [3]-coordinated by V^{5+} (Group B) and have bond-valence sums close to 2.00 *vu* (average among all $[V^{5+}{}_{10}O_{28}]^{6-}$ decavanadates = 1.89 *vu*); to conform to the valence-sum rule, these decavanadate O^{2-} ions can accept only a weak bond from the interstitial complex, typically a hydrogen bond. The remaining 22 external O^{2-} ions (Groups C, D, E, F, and G) bond to one or two V^{5+} ions and require several hydrogen bonds and/or bonds from the cation species of the interstitial complex.

Bond-valence variations within the $[(V^{4+}{}_xV^{5+}{}_{10-x})O_{28}]^{(6+x)-}$ decavanadate unit

Decavanadate units that contain V^{4+} in addition to V^{5+} have a higher aggregate negative charge than the $[V^{5+}{}_{10}O_{28}]^{6-}$ unit, and this charge increases as the proportion of V^{4+} increases; accordingly, the positive charge of the interstitial complex must increase to balance that charge. Thus, an obvious indication of a mixed-valence decavanadate group is one with a charge greater than 6+. However, such reasoning is not always straightforward, as cation species such as $(NH_4)^+$ can occur in decavanadate compounds and routine chemical and structural analysis may not reveal their presence or reliably measure their abundance.

Figure 2 shows the variation in the net charge of the $[V_{10}O_{28}]$ unit and the mean incident bond-valence at the 10 V^{n+} ions in a specific $[V_{10}O_{28}]$ unit for the decavanadate minerals considered here. Examination of the individual V–O bonds in two known mixed-valence decavanadate minerals (nashite and bluestreakite; Table 1, Appendix 1) shows that the V^{4+} cations are ordered in the [1+4+1] V octahedra, particularly the symmetry-equivalent V2 and V3 octahedra. These octahedra are perhaps the most compliant in the decavanadate unit and most able to adjust to changes in bond length that result from incorporation of V^{4+} (Schindler *et al.* 2000a).

Although the remaining bond valence at individual surface O^{2-} ions in $[V^{5+}{}_{10}O_{28}]^{6-}$ decavanadate minerals can be calculated directly, such a calculation is not straightforward for mixed-valence $[(V^{4+}{}_xV^{5+}{}_{10-x})O_{28}]^{(6+x)-}$ decavanadates. In octahedra with mixed-valence V, use of the V^{5+} bond-valence parameters for individual bonds provides only an estimate for mixed-valence V–O bond valence, as discussed in detail by Cooper *et al.* (2019a). However, those authors provide bond-valence parameters that give the best estimate of the formal aggregate valence of V in mixed-valence octahedra in decavanadate minerals. Using that equation, we can calculate the aggregate remaining bond valence for mixed-valence decavanadate minerals, although this procedure may slightly underestimate the amount of V^{4+} due to the slight overestimation of the mean bond-valence sum per V^{n+} ion in the decavanadate unit (see values for $[V^{5+}{}_{10}O_{28}]^{6-}$ in Fig. 2).

Nashite, $Na_3Ca_2[(V^{5+}{}_9V^{4+})O_{28}](H_2O)_{24}$, is bluish green, indicating the presence of mixed-valence V. Appendix 1 shows the remaining charge for nashite, calculated using the aggregate method of Cooper *et al.* (2019a). That calculation gives a value of 7.10 *vu*, in close agreement with the balancing charge of the interstitial complex (7 *vu*).

Based on an analysis of bonding in bluestreakite, Cooper *et al.* (2019a) noted that an additional, as yet uncharacterized, charge-balancing mechanism must occur in bluestreakite, and we confirm that conclusion. The charge on the decavanadate unit,

Downloaded from http://pubs.geoscienceworld.org/canmin/article-pdf/60/2/341/5579492/i1499-1276-60-2-341.pdf?casa_token=5vtN9F2UacIAAAAA:0IujIDr-RUgSWmTo078dd4CLNq
by University of Arizona user

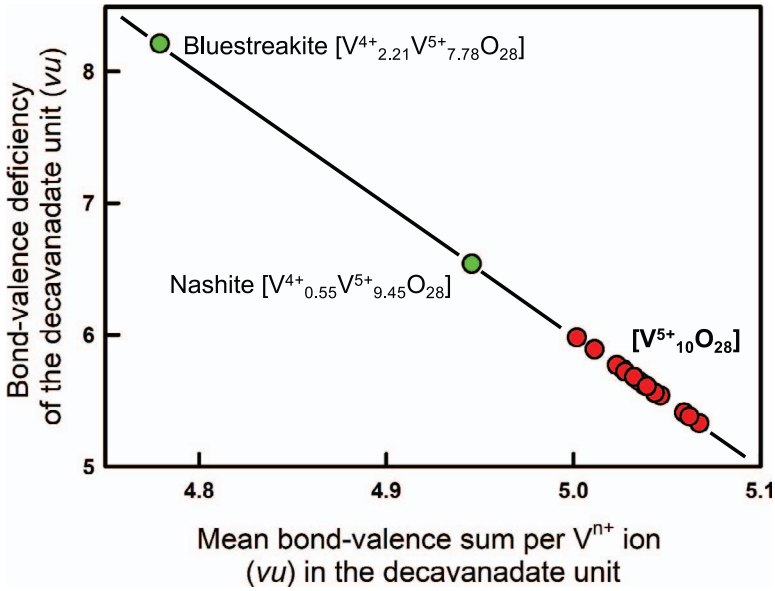

FIG. 2. Charge deficiency of decavanadate units for 18 decavanadate minerals *versus* the mean calculated bond-valence sum for the 10 V ions in that decavanadate unit (red circles). The charge deficiencies for nashite and bluestreakite (green circles) show their mixed-valence nature.

$[V^{4+}_{3.40}V^{5+}_{6.60}O_{28}]^{9.4-}$, was calculated as noted above, and the incident bond-valence of 9.4 *vu* required for electroneutrality is greater than the charge of the interstitial complex, leading to the suggestion of an uncharacterized charge-balancing mechanism. Further investigation of bluestreakite is warranted.

Hydropascoite was originally described as a $[V^{5+}_{10}O_{28}]^{6-}$ decavanadate mineral (Kampf *et al.* 2017b), although the empirical chemical formula was written as $[H^{+}_{0.31}V^{5+}_{10}O_{28}]^{6-}$ and its yellow-green color was ascribed to non-species-defining minor V^{4+} at the V4 and V5 sites. Cooper *et al.* (2019a) suggested that hydropascoite may contain a significant amount of V^{4+}, possibly balanced by an unknown constituent in the interstitial complex (although NH_4 was sought and not found). Analysis of the residual bond-valence for hydropascoite (–7.44 *vu*) is given in Appendix 1 and agrees with the calculations of Cooper *et al.* (2019b). Further analysis of the interstitial constituents is warranted and may lead to redefinition of the formula of this mineral.

Bond-valence variations within the $[H_xV_{10}O_{28}]^{(6-x)-}$ decavanadate unit

The H^+ ions in the decavanadate unit are typically not located by crystal-structure refinement from X-ray diffraction data. Detailed evaluation of O^{2-} ions bonded to V in a series of 15 well-refined synthetic protonated decavanadates (Cooper *et al.* 2019b) showed that the bond valence from V^{5+} ions incident at O_{donor} ions is in the range 1.15–1.38 *vu* (when two strongly disordered structures are removed) with a mean value of 1.28 *vu*. Where there is one H^+ per decavanadate unit, the low incident bond-valence sum occurs at a C-type O^{2-} ion (Table 2); where there is more than one H^+ per decavanadate unit, the additional incident bond-valence required occurs at a B- or C-type O^{2-} ion (Table 2).

Both rakovanite (Kampf *et al.* 2011b) and gunterite (Kampf *et al.* 2011a) were originally described as protonated decavanadate minerals, but more recent work (Kampf *et al.* 2021b, 2022) has shown that both minerals contain a $[V^{5+}_{10}O_{28}]^{6-}$ decavanadate unit with $(NH_4)^+$ (rakovanite) and additional Na^+ (gunterite) as additional interstitial species. Caseyite (Kampf *et al.* 2020a; Table 1), ideally $[(V^{5+}O_2)Al_{7.5}(OH)_{15}(H_2O)_{13}]_2[H_2V^{4+}V^{5+}_9O_{28}][V^{5+}_{10}O_{28}]_2(H_2O)_{90}$, contains both protonated and unprotonated decavanadate units. In the $[H_2V^{4+}V^{5+}_9O_{28}]$ decavanadate unit, four of the five distinct *V* sites have bond-valence sums (BVS) close to 5 *vu*, whereas the fifth site has an incident bond-valence sum of 4.68 *vu* (using bond-valence parameters for V^{5+}–O^{2-}). The formula $Vp = 1.538(Vc) - 2.692$ of Cooper *et al.* (2019a, b) for calculating the aggregate valence of V (*V*p) from the incident bond-valence sum (*V*c) gives an aggregate

Downloaded from http://pubs.geoscienceworld.org/canmin/article-pdf/60/2/341/5579492/i1499-1276-60-2-341.pdf?casa_token=5vtN9F2UacIAAAAA:0IujIDr-RUgSWmTo078dd4CLNq by University of Arizona user

bond-valence sum of 4.5 *vu* at the *V*5 site, corresponding to an occupancy of $0.5V^{4+} + 0.5V^{5+}$ and a net stoichiometry of $[V^{4+}V^{5+}{}_9O_{28}]^{7-}$. The O14 site in this mixed-valence polyanion has an incident bond-valence sum of 1.33 *vu*, indicating occupancy by OH; there is a small residual electron-density maximum ~1 Å from O14, consonant with the presence of a H^+ ion, and O19 is a sensible $O_{acceptor}$, 1.88 Å from H^+. Therefore, the first decavanadate anion is a doubly protonated mixed-valence decavanadate, $[H_2V^{4+}V^{5+}{}_9O_{28}]^{5-}$. In the second decavanadate unit, all *V* sites have incident bond-valence sums close to 5 *vu*, indicating that all V is V^{5+}: $[V^{5+}{}_{10}O_{28}]^{6-}$. Therefore, the stereochemistry definitely shows the presence of a protonated decavanadate unit in caseyite, indicating that such a unit can occur in minerals. The intriguing issue for the $[H_2V^{4+}V^{5+}{}_9O_{28}]^{5-}$ unit is the presence of both V^{4+} and H^+, as the presence of V^{4+} lowers the aggregate charge and the presence of H^+ raises the aggregate charge. Why is $[H_2V^{4+}V^{5+}{}_9O_{28}]^{5-}$ favored over $[HV^{5+}{}_{10}O_{28}]^{5-}$? This is presumably related to the ambient Eh and pH during crystallization, but this cannot be the only issue involved, as the structure also contains the $[V^{5+}{}_{10}O_{28}]^{6-}$ unit. Moreover, although not recognized in the ideal formula, caseyite also contains interstitial species $[(Na_{0.82}Ca_{0.35}K_{0.27})(SO_4)_{1.33}$ with formal charges of 1.79^+ and $2.66^-]$, giving it great flexibility in attaining overall electroneutrality in the structure. The effect of Eh and pH could be examined *via* synthesis under different Eh-pH conditions and in the absence of interstitial Na^+, K^+, Ca^{2+}, and $(SO_4)^{2-}$.

Calculation of Lewis-Base Strengths of the Vanadate Polyanions

Details of how to calculate Lewis acid and base strengths are given by Hawthorne & Schindler (2008). To maintain electroneutrality of the entire structure, the bonds to the structural unit must neutralize the charge of the structural unit, and the Lewis basicity of the structural unit is the effective charge on the structural unit divided by the number of bonds to the structural unit. Thus, to calculate the Lewis basicity, we need to know (1) the effective charge on the structural unit and (2) the number of bonds incident at the structural unit from adjacent interstitial complexes and neighboring structural units. For structural units with no H^+ ions, *i.e.*, $[V_{10}O_{28}]^{6-}$ and $[(V^{4+}{}_xV^{5+}{}_{10-x})O_{28}]^{(6+x)-}$, the effective charge on the structural unit is the formal charge. For structural units containing H^+ ions, it is necessary to account for the charge transferred from the structural unit by hydrogen bonds to external anions (commonly 0.20 *vu*; Brown 1981, Hawthorne 1992).

There are four types of decavanadate polyanion:

(1) $[V_{10}O_{28}]^{6-}$; Effective charge = –6;
(2) $[H_yV_{10}O_{28}]^{(6-y)-}$; Effective charge = $-6 + y - 0.20y = -6 + 0.80y$;
(3) $[(V^{4+}{}_xV^{5+}{}_{10-x})O_{28}]^{(6+x)-}$; Effective charge = $-6 - x$;
(4) $[H^+{}_y(V^{4+}{}_xV^{5+}{}_{10-x})O_{28}]^{(6+x-y)-}$; Effective charge = $-6 - x + y - 0.20y$.

Calculation of the number of bonds incident at the structural unit from adjacent interstitial complexes and neighboring structural units is less straightforward here. For many mineral families (*e.g.*, sulfates, borates), one counts the number of bonds from the interstitial complex to the structural unit and develops a relation between the CDA (**C**harge **D**eficiency per **A**nion for the structural unit) and the number of bonds from the interstitial complex to the structural unit. Then for any structural unit in an unknown structure (observed or theoretical), one may use this relation to derive the number of bonds from the interstitial complex to the structural unit. However, this is not possible for the decavanadate minerals, as the presence of many (often disordered) (H_2O) groups commonly precludes accurate assignment of hydrogen bonds; hence, there is insufficient experimental data currently available to develop a predictive relation for the number of these bonds. Earlier work (Hawthorne 1985, 1986, 1990) assumed a coordination number of [4] for O^{2-} ions in structures with pentavalent cations in a structural unit, and this value was quite successful in predicting aspects of the interstitial complex.

For the decavanadate polyanion, there are 28 anions and these need $28 \times 4 = 112$ bonds to give an anion coordination number of [4]. Inspection of Table 2 indicates that there are 60 internal bonds for $[V_{10}O_{28}]^{6-}$ and $[(V^{4+}{}_xV^{5+}{}_{10-x})O_{28}]^{(6+x)-}$, and $60 + x$ internal bonds for $[H_xV_{10}O_{28}]^{(6-x)-}$ (the additional x bonds come from the $H^+{}_x$ ions in the polyanion but does not include hydrogen bonds beyond the donor–hydrogen bond for each H). Hence, the number of bonds needed from the interstitial complex for each polyanion is as follows: $[V_{10}O_{28}]^{6-}$ and $[(V^{4+}{}_xV^{5+}{}_{10-x})O_{28}]^{(6+x)-}$: $112 - 60 = 52$; $[H_yV_{10}O_{28}]^{(6-y)-}$: $112 - 60 - y = 52 - y$. The resulting Lewis basicities for the various decavanadate units are given in Table 3 and have a total variation in Lewis basicity of 0.054–0.154 *vu*.

Lewis Acidity-Basicity and the Interstitial Complex

The variation in mean coordination number for simple cations (values from Gagné & Hawthorne 2017) is shown as a function of Lewis acidity for

Downloaded from http://pubs.geoscienceworld.org/canmin/article-pdf/60/2/341/5579492/i1499-1276-60-2-341.pdf?casa_token=5vtN9F2UacIAAAAA:0IujIDr-RUgSWmTo078dd4CLNq by University of Arizona user

TABLE 3. LEWIS BASICITIES (*vu*) FOR VANADATE POLYANIONS

Polyanion	*x*	Lewis basicity
$[V_{10}O_{28}]^{6-}$	0	6/52 = 0.115
$[H_xV_{10}O_{28}]^{(6-x)-}$	1	5.2/52 = 0.100
	2	4.4/52 = 0.085
	3	3.6/52 = 0.069
	4	2.8/52 = 0.054
$[(V^{4+}{}_xV^{5+}{}_{10-x})O_{28}]^{(6+x)-}$	1	7/52 = 0.135
	2	8/52 = 0.154

Lewis-acid strengths up to 0.80 *vu* in Figure 3. Also shown on Figure 3 are Lewis-base strengths for the vanadate polyanions listed in Table 3 (green circles) and the bond-valence deficiencies for the various external O^{2-} ions of the vanadate polyanions (black circles). The dashed vertical lines show the range in Lewis basicity of the vanadate polyanions (up to 0.154 *vu*) and the range of bond-valence deficiencies for the various external O^{2-} ions of the vanadate units (up to 0.325 *vu*).

The monovalent cations Cs^+ to Na^+ plus $(NH_4)^+$ (Lewis acidity = 0.109 *vu*) have Lewis acidities in the same range as the Lewis basicities of the vanadate polyanions and hence satisfy the principle of correspondence of Lewis acidity-basicity (Hawthorne & Schindler 2008). In accord with this correspondence, Na^+ and $(NH_4)^+$ are the most common interstitial cations, and K^+ also occurs but is less common than Na^+ and $(NH_4)^+$ in decavanadate minerals. The Lewis acidity of Na^+ matches the Lewis basicity of the $[(V^{4+}{}_2V^{5+}{}_8)O_{28}]^{8-}$ polyanion (Table 3). However, all the other polyanions in Table 3 have lower Lewis basicities (0.054–0.135 *vu*) that do not exactly match the Lewis acidity of Na^+. In interstitial complexes with simple cations, agreement with the valence-matching principle may be improved by a change in coordination number of the cations. For example, a change in coordination number from [6] to [9] will change the mean bond valence of the Na^+–O^{2-} bonds from 1/6 = 0.167 *vu* to 1/9 = 0.111 *vu*. It is apparent from Table 3 that protonated vanadate polyanions have the lowest Lewis basicities, and synthetic protonated vanadates such as $Cs_4(H_2O)_4[H_2V_{10}O_{28}]$ (Rigotti *et al.* 1987) and $Rb_4Na(H_2O)_{10}[HV_{10}O_{28}]$ (Yakubovich *et al.* 2015) contain the least-acid cations, *i.e.*, Cs^+ and Rb^+.

Transformer and Non-Transformer (H_2O)

Many decavanadate minerals have interstitial cations with Lewis acidities that exceed the maximum Lewis basicity of the decavanadate units (*cf.* Table 1, Fig. 3). These minerals conform to the principle of correspondence of Lewis acidity-basicity by moderat-

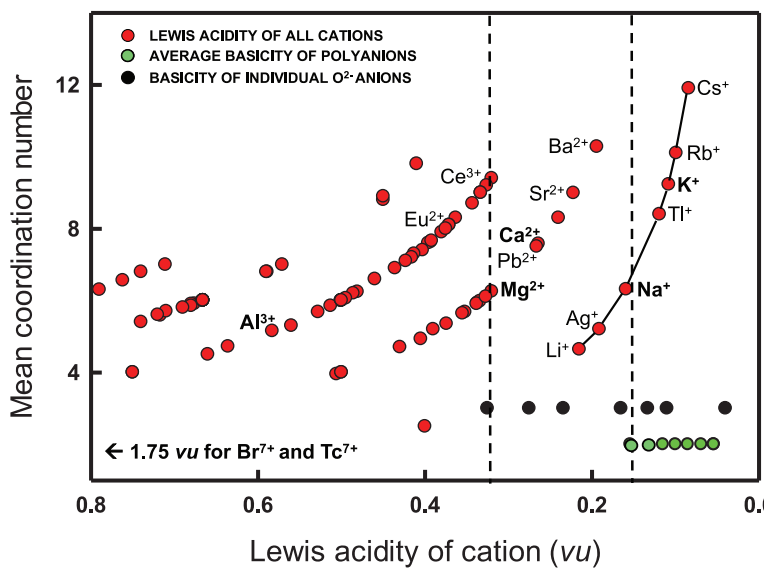

FIG. 3. Mean observed coordination number for 91 cations as a function of their Lewis acidity (red circles). The green circles indicate the Lewis basicities of the decavanadate units listed in Table 2. The black circles are the bond-valence deficiencies of various O^{2-} ions of the vanadate unit (Table 3, Appendix 1). The broken red lines denote the maximum value of the green circles and the black circles.

Downloaded from http://pubs.geoscienceworld.org/canmin/article-pdf/60/2/341/5579492/i1499-1276-60-2-341.pdf?casa_token=5vtN9F2UacIAAAAA:0IujIDr-RUgSWmTo078dd4CLNq
by University of Arizona user

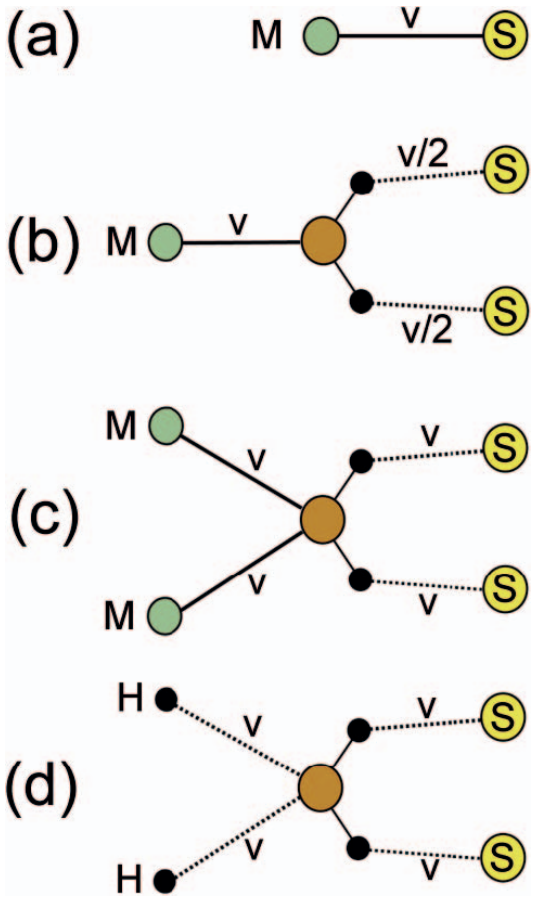

FIG. 4. The bond-valence structure around (H_2O) as a function of local bond-topology; (a) a cation, C (green), bonded to an anion, S (yellow), with bond valence v *vu*; (b) a cation bonded to an (H_2O) group (O = orange; H = black) with bond valence v *vu*; the H^+ ions hydrogen bond to the anions S with bond valence v/2 *vu* per bond; (c) two cations bonded to an (H_2O) group with bond valence v *vu* per bond; the H^+ ions hydrogen bond to the anions S with bond valence v *vu* per bond; (d) two H^+ ions hydrogen-bonded to an (H_2O) group with bond valence v *vu* per bond; the H^+ ions of the (H_2O) group hydrogen bond to the anions S with bond valence v *vu* per bond. After Hawthorne (2015).

ing the Lewis acidity of the interstitial cations *via* bonding to (H_2O) groups (Hawthorne 1992).

Consider the atom arrangements in Figures 4a and 4b: in Figure 4a, the anion receives one bond of valence v *vu* from the cation *M*. In Figure 4b, the donor O^{2-} ion of the (H_2O) group receives a bond valence of v *vu* from the cation; the bond-valence requirements of the O^{2-} ion are satisfied by two O^{2-}–H^+ bonds of strength (1 – v/2) *vu*. Each H^+ ion forms a hydrogen bond with an *S* anion to satisfy its own bond-valence requirements, and the *S* anion thus receives a bond valence of v/2 *vu*, one half (Fig. 4b) of what it received where it bonded directly to the *M* cation (Fig. 4a). The (H_2O) group is a bond-valence transformer, dividing one bond into two bonds of half the bond valence; the (H_2O) group is called a *transformer* (H_2O) group (Hawthorne & Schindler 2008). In the atomic arrangement in Figure 4c, two cations bond to an (H_2O) group, which bonds to two anions. The O^{2-} ion receives a bond valence of 2v *vu* from the cations, and the valence-sum rule at this O^{2-} ion is satisfied by two O–H bonds of strength (1 – v) *vu*. Each H^+ ion forms a hydrogen bond with a neighboring anion, which receives the same bond valence (v *vu*, Fig. 4c) as if it is bonded directly to one *M* cation (Fig. 4a). Consider the atomic arrangement in Figure 4d in which (H_2O) is involved only in a hydrogen-bond network. Here, the O^{2-} ion is usually [4]-coordinated, and the (H_2O) group participates in two O–H (donor–hydrogen) bonds and two H···O hydrogen bonds. Thus an (H_2O) group accepting two hydrogen bonds does not modify the strengths of its exident chemical bonds, it propagates them to more distant anions, as is the case where the (H_2O) group is bonded to two cations (Fig. 4c). Moreover, additional interstitial transformer (H_2O) groups can result in larger complex cations with more than one layer of coordinating (H_2O) groups, as shown in Figure 5. Thus, a transformer (H_2O) group may (1) moderate Lewis acidity and (2) propagate chemical bonds to anions too distant from a cation to bond to it directly. A non-transformer (H_2O) group propagates chemical bonds to anions too distant from a cation to bond to it directly.

STEREOCHEMISTRY OF THE INTERSTITIAL COMPLEX

Slightly modifying the expression of Hawthorne (2012), we may write a generalized interstitial complex as

$$\{{}^{[m]}M^{+}{}_{a}{}^{[n]}M^{2+}{}_{b}{}^{[l]}M^{3+}{}_{c}(H_2O)_d({}^{[q]}OH)_f\{H_2O\}_g\}^{(a+2b+3c-f)+}$$

where (OH) is not part of the decavanadate polyanion, (H_2O) are bonded to interstitial cations, {H_2O} are not bonded to any cations except H^+, and we have not distinguished between transformer and non-transformer (H_2O) and {H_2O} groups. Note that in this representation of the interstitial complex, (H_2O) and {H_2O} groups may be transformer or non-transformer, depending on the details of each structure. There are three types of linkage between the interstitial cation species M^{n+} and the decavanadate units: (1) M^{n+}–${}^{V}O^{2-}$, (2) M^{n+}–(H_2O)–${}^{V}O^{2-}$, and (3) M^{n+}–(H_2O)–{H_2O}–${}^{V}O^{2-}$, where ${}^{V}O^{2-}$ denotes an O^{2-} ion of the decavanadate group.

Downloaded from http://pubs.geoscienceworld.org/canmin/article-pdf/60/2/341/5579492/i1499-1276-60-2-341.pdf?casa_token=5vtN9F2UacIAAAAA:0IujIDr-RUgSWmTo078dd4CLNq
by University of Arizona user

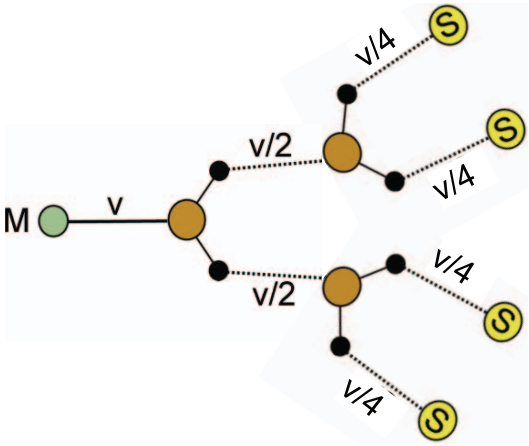

FIG. 5. The bond-valence structure around a cation with sequential transformer (H_2O) groups reducing the bond valence transmitted to an anion of the structural unit; legend as in Figure 4.

Interstitial cations

In the decavanadate minerals, the interstitial complex contains individual cation species of formal charge 1+, 2+, and 3+. The total formal charge of the ions in the interstitial complex must neutralize the formal charge of the decavanadate unit (commonly 6–). Thus, the number of interstitial cations may in principle vary from two ($Al^{3+}{}_2$) to six (*e.g.*, $Na^{+}{}_6$) unless the presence of interstitial $(OH)^-$ ions increases the number of interstitial cations in order to maintain electroneutrality. Two interstitial cations per $[V_{10}O_{28}]^{6-}$ unit have not yet been observed (Table 1) and the mean number of interstitial cations is ~4 per $[V_{10}O_{28}]^{6-}$ unit. One intriguing feature of the decavanadate minerals is that the interstitial complexes generally contain two different cation species; only pascoite, hydropascoite, and okieite contain a single species: Ca^{2+}, Ca^{2+}, and Mg^{2+}, respectively. The reason for this is not clear, but it should be noted that synthetic decavanadates with inorganic interstitial species also tend to contain two different cation species.

Simple and polyatomic cations

A *simple cation* is a single positively charged ion, *e.g.*, Na^+, Al^{3+}, and a *polyatomic cation* is a cluster of ions with a net positive charge, *e.g.*, $\{NH_4\}^+$, $\{Na(H_2O)_6\}^+$. In the decavanadate minerals, simple cations always occur as part of a polyatomic cation. Thus, in lasalite, Na^+ has the coordination $(Na^{V}O_3(H_2O)_4)^+$. However, the polyatomic cation does not include the bonds to the decavanadate unit, and so the ^{V}O ions are omitted from the polyatomic cation. We do not wish to lose the information of how many bonds the simple cation has with the anions of the decavanadate unit and so include the coordination number of the simple cation in the formula for the polyatomic cation: thus, we write $(Na^{V}O_3(H_2O)_4)^+$ in lasalite as the polycation $\{^{[7]}Na(H_2O)_4\}^+$.

$\{NH_4\}^+$ is a fairly common cation of the interstitial complex in decavanadate minerals (Table 1), and it is desirable to identify its coordinating anions. There are two ways in which this may be done: (1) use the bond-valence curve of García-Rodríguez *et al.* (2000) for $(NH_4)^+$–O^{2-} to identify the significant aggregate interactions between $\{NH_4\}^+$ and its coordinating anions, and (2) locate the constituent H^+ ions of the $\{NH_4\}^+$ group and then identify the O^{2-} anions with which they form hydrogen bonds. García-Rodríguez *et al.* (2000) list observed coordination numbers for $\{NH_4\}^+$ in 266 inorganic structures; they vary from [4] (x1) to [12] (x34) with a weighted mean value of [9.2], giving a Lewis acidity of 0.109 *vu*. The high mean coordination number indicates that the $H^+\cdots O^{2-}$ hydrogen bonds involving $\{NH_4\}^+$ in inorganic structures are commonly bifurcated or trifurcated. Here, we took an $\{NH_4\}^+$–O^{2-} limit of 3.10 Å, corresponding to a bond valence of 0.07 *vu*, beyond which we did not consider such distances as bonds; this procedure resulted in coordination numbers of $\{NH_4\}^+$ close to [9]. In principle, one could use the H positions and the H^+–O^{2-} bond-valence curve of Gagné & Hawthorne (2018) to determine H···O bond valences. However, the H positions are often not determined, and where they are determined, they have systematic positional error due to delocalization of electron density along the H–N_{donor} bond.

Lewis acidity-basicity and polyatomic cations

Inspection of Figure 3 shows that the only simple cations that obey the principle of correspondence of Lewis acidity-basicity for the decavanadate units are Cs^+, Rb^+, K^+, Tl^+, and Na^+. Although changes in coordination number can significantly moderate the Lewis acidity of the interstitial species to match the Lewis basicity of the polyanion structural unit, variation in the number of transformer (H_2O) groups is a more effective mechanism for this purpose, giving rise to polyatomic cations, *e.g.*, $\{Mg(H_2O)_6\}^{2+}$. Inspection of Figure 3 shows that simple divalent and trivalent cations have Lewis acidities that are too large to match the Lewis basicities of the decavanadate structural units. However, the transformer effect of (H_2O) can reduce the bond valences from these higher-valence cations and bring them closer to the Lewis basicities of the decavanadate polyanions.

Downloaded from http://pubs.geoscienceworld.org/canmin/article-pdf/60/2/341/5579492/i1499-1276-60-2-341.pdf?casa_token=5vtN9F2UacIAAAAA:0IujIDr-RUgSWmTo078dd4CLNq by University of Arizona user

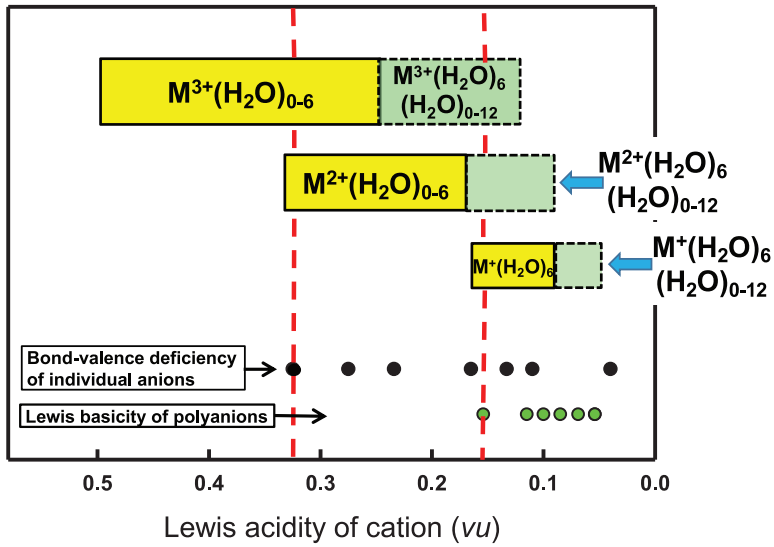

FIG. 6. Ranges in Lewis acidity of complex interstitial cations with one layer of coordinating transformer (H_2O) groups (yellow boxes) and complex interstitial cations with two layers of coordinating transformer (H_2O) groups (green boxes). The green circles indicate the Lewis basicities of the decavanadate units listed in Table 2. The black circles are the bond-valence deficiencies of various O^{2-} ions of the vanadate unit (Table 3, Appendix 1). The broken red lines denote the maximum value of the green circles and the black circles.

Trivalent cations

The trivalent cation Al^{3+} occurs in decavanadate minerals and the Lewis acidity of Al^{3+} is 0.583 *vu*, a value that greatly exceeds the range in Lewis base strength of the decavanadate units (Fig. 3). However, formation of the polyatomic cation $\{^{[6]}M^{3+}(H_2O)_{0-6}\}^{3+}$ with transformer (H_2O) groups extends the range in Lewis acidity down to much lower values (Fig. 6, yellow box). The completely hydrated polyatomic cation $\{^{[6]}M^{3+}(H_2O)_6\}^{3+}$ (Fig. 7a) occurs in hughesite (Table 1) in which it has a Lewis acidity of 0.25 *vu* if it contains all transformer (H_2O) groups. Although some of the individual anions of the decavanadate unit have bond-valence deficiencies that suggest they could form bonds with the polyatomic $\{^{[6]}M^{3+}(H_2O)_6\}^{3+}$ cation, the remaining anions of the decavanadate unit cannot do so, and structure stability requires that the mean Lewis acidity of the $\{^{[6]}M^{3+}(H_2O)_6\}^{3+}$ polyatomic cation matches with the Lewis basicities (green circles, Fig. 6) of the decavanadate units. However, as noted above, a second shell of transformer $\{H_2O\}$ groups (Fig. 5) can result in larger polyatomic cations with more than one layer of coordinating (H_2O) groups and lower Lewis acidities, as shown in Figure 6 (green boxes).

Kampf *et al.* (2021a) defined a "flatimer" as a small, approximately two-dimensional Al^{3+} polyoxocation; this term distinguishes such arrangements from higher-symmetry Keggin-like ions like the more familiar $[AlO_4Al_{12}(OH)_{24}(H_2O)_{12}]^{7+}$ ion (Casey 2006). The $\{^{[6]}M^{3+}(H_2O)_6\}^{3+}$ group can polymerize to form linear groups of the form $[Al_n(OH)_{2(n-1)}(H_2O)_{2(n+2)}]^{(n+2)+}$. The $n = 2$ member occurs in postite (Fig. 7b) and the $n = 4$ member occurs in protocaseyite (Fig. 7c); note that the stoichiometry of the linear polymers is not affected by staggering of the chain, as occurs in protocaseyite. Assuming that all (H_2O) groups linked to Al^{3+} are transformer groups, the Lewis acidity of the generalized $[Al_n(OH)_{2(n-1)}\ (H_2O)_{2(n+2)}]^{(n+2)+}$ chain is given by $(n + 2) / 2 \times 2 \times (n + 2) = 0.25$ *vu*, and hence the Lewis acidity of the linear flatimers is fixed at 0.25 *vu*. This makes the linear flatimer very flexible in terms of its linkage to the decavanadate unit: its Lewis acidity is independent of chain length and chain configuration (*i.e.*, straight or staggered). A flatimer may thus adopt its ideal spatial configuration to link to the decavanadate units with the least strain, *i.e.*, with the optimal stereochemistry.

Non-linear flatimers are shown in Figures 7d and e. The flatimer $[Al_{13}(OH)_{24}(H_2O)_{24}]^{15+}$ (Fig. 7e) occurs in the synthetic compound $[Al_{13}(OH)_{24}(H_2O)_{24}]Cl_{15}(H_2O)_{13}$ (Seichter *et al.* 1998) and shows strong similarities to the $[V^{5+}O_2Al_{10}(OH)_{20}(H_2O)_{18}]^{15+}$ flatimer in caseyite (Fig. 7d). Visual comparison of Figures 7d and 7e shows that, relative to the $[Al_{13}(OH)_{24}(H_2O)_{24}]^{15+}$ flatimer, the flatimer in caseyite has two fewer octahedra and Al^{3+} at one edge-

Downloaded from http://pubs.geoscienceworld.org/canmin/article-pdf/60/2/341/5579492/i1499-1276-60-2-341.pdf?casa_token=5vtN9F2UacIAAAAA:0IujIDr-RUgSWmTo078dd4CLNq by University of Arizona user

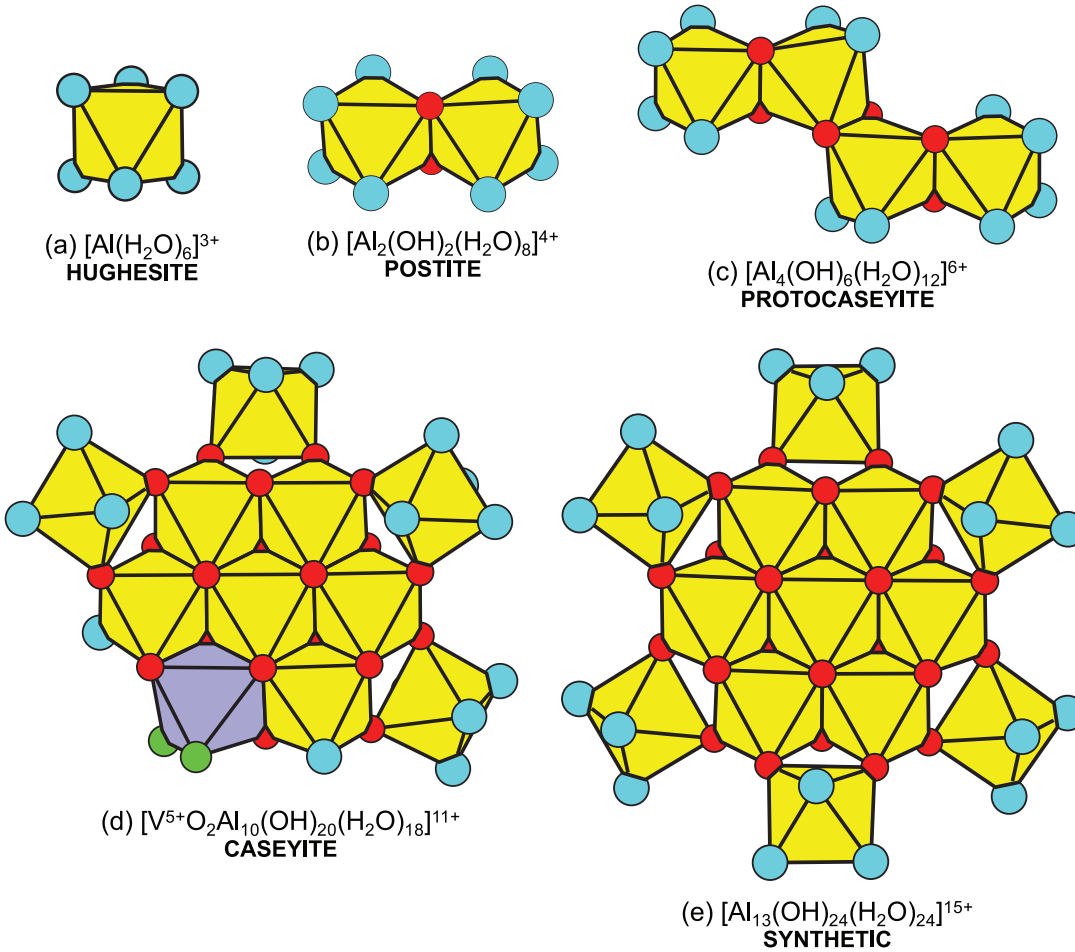

FIG. 7. Complex cations involving Al^{3+} in decavanadate minerals; (a) the monomer $[Al(H_2O)_6]^{3+}$ in hughesite; various flatimers in minerals [(b) = postite; (c) = protocaseyite; (d) = caseyite]; (e) synthetic $[Al_{13}(OH)_{24}(H_2O)_{24}]Cl_{15}(H_2O)_{13}$. Blue circles = (H_2O), red circles = $(OH)^-$, green circles = O^{2-} ions.

sharing octahedron has been replaced by V^{5+} with the loss of two H^+ ions at the outer edge, leaving two O^{2-} ions (shown in green in Fig. 7d), which have incident bond-valences from the central V^{5+} ion of 1.63 and 1.59 *vu*, respectively. These two ions must receive bond valence from other interstitial cations (*e.g.*, Na^+, H^+) to satisfy the valence-sum rule, and they accept two and three hydrogen bonds, respectively. Thus, the two O^{2-} ions are hydrogen-bond acceptors, whereas the other external ions of the flatimer are hydrogen-bond donors; thence, the flatimer in caseyite has polar character, acting as a cation at most ions by donating hydrogen bonds to its surroundings, and acting as an anion at the two O^{2-} anions by accepting hydrogen bonds from its surroundings. There is considerable disorder in the structure of caseyite: the corner-sharing octahedra that girdle the flatimer are only partly occupied, and the sites occupied by the interstitial Na^+, K^+, Ca^{2+}, $(SO_4)^{2-}$, and (H_2O) groups show both partial occupancy and positional disorder. Hence, it is difficult to assign Lewis acidities to these constituents and quantitatively evaluate their interactions with the two types of decavanadate unit.

The recent discovery of caseyite shows the potential of decavanadate structures to incorporate large heteropolyatomic cations into their structures. Casey (2006) reviewed the structures of several large aqueous Al-hydroxide polyatomic cations, including the Baker-Figgis-Keggin Al_{13} $[MO_4Al_{12}(OH)_{24}(H_2O)_{12}]$ isomers (M = Ge^{4+}, Ga^{3+}, and Al^{3+}), the Al_{30} group $[Al_2O_8Al_{28}(OH)_{56}(H_2O)_{28}]^{18+}$, and various flat-$Al_n$ groups, and noted that "most large polymers

Downloaded from http://pubs.geoscienceworld.org/canmin/article-pdf/60/2/341/5579492/i1499-1276-60-2-341.pdf?casa_token=5vtN9F2UacIAAAAA:0IujIDr-RUgSWmTo078dd4CLNq by University of Arizona user

are yet uncharacterized and unidentified…". The existence of caseyite and protocaseyite suggests that the $[V_{10}O_{28}]$ polyanions might be used to induce co-crystallization of large Al^{3+}-containing polyatomic cations from aqueous solution and lead to their structural characterization by crystal-structure solution and refinement.

Divalent cations

The only divalent cations that have so far been found in decavanadate minerals are Mg^{2+} and Ca^{2+} (Table 1) with Lewis acidities of 0.337 and 0.264 *vu*, respectively. These values exceed the range in Lewis base strength of the decavanadate units (Fig. 3), but the formation of the polyatomic cations $\{M^{2+}(H_2O)_{0-n}\}^{2+}$ and $\{M^{2+}(H_2O)_n\{H_2O\}_{0-2n}\}^{2+}$ extends the range in Lewis acidity down to much lower values (Fig. 6, yellow and green boxes). Mg^{2+} occurs as a completely hydrated polyatomic cation in numerous decavanadate minerals (Table 1), despite the fact that the range in bond-valence requirements of the (external) decavanadate anions (0.325–0.040 *vu*, Table 2) overlaps the observed ranges in bond length and bond valence for Mg–O in both [6]- and [8]-coordination (Gagné & Hawthorne 2016): Mg–O: 1.935–2.582 Å, 0.478–0.111 *vu*, (Fig. 6). Thus, interstitial Mg^{2+} does not bond directly to the O^{2-} ions of the decavanadate unit in the minerals of Table 1.

Ca^{2+} is also a common cation in decavanadate minerals (Table 1) and occurs with coordination numbers [7] and [8]. As shown in Figure 6, the range in bond-valence requirements of the (external) decavanadate anions (0.325–0.040 *vu*, Table 2) overlaps the observed ranges in bond length and bond valence for Ca–O in both [7]- and [8]-coordination (Gagné & Hawthorne 2016): Ca–O 2.210–3.176 Å, 0.477–0.045 *vu*. In some decavanadate minerals, Ca^{2+} in [7]- or [8]-coordination does bond directly to Group F O^{2-} ions of the vanadate unit (Table 4). In pascoite, hydropascoite, and magnesiopascoite, Ca^{2+} ions in [7]-coordination bond to Group F O^{2-} ions, with bond valences of 0.26 (O13, O13′) and 0.28 (O14, O14′) *vu*. In burroite and hydropascoite, Ca^{2+} in [8]-coordination (bond valence = 0.14 *vu*) bonds to one ion in Group F; notably in hydropascoite, there is one $\{^{[7]}Ca^{2+}(H_2O)_5\}^{2+}$ polyatomic cation that bonds directly to two ions of the $[V_{10}O_{28}]^{6-}$ group. Wernerbaurite contains a $\{Ca^{2+}(H_2O)_7\}^{2+}$ group, and hydropascoite and kokinosite each contain a $\{^{[8]}Ca^{2+}(H_2O)_8\}^{2+}$ group. Thus $^{[6]}Ca^{2+}$ is not observed, and $\{^{[7]}Ca^{2+}(H_2O)_7\}^{2+}$, $\{^{[7]}Ca^{2+}(H_2O)_5\}^{2+}$, $\{^{[8]}Ca^{2+}(H_2O)_7\}^{2+}$, and $\{^{[8]}Ca^{2+}(H_2O)_8\}^{2+}$ do occur in decavanadate minerals.

Monovalent cations

Monovalent cations are the most common interstitial cations in decavanadate minerals: Na^+ and $(NH_4)^+$ are common (Table 1), and K^+ is an essential constituent of hummerite and a non-essential constituent of ammoniolasalite. For Na^+, the minimum bond lengths for coordination numbers from [4] to [9] in inorganic oxides and oxysalts (Gagné & Hawthorne 2016) are all around 2.16 Å with a bond valence of 0.33 *vu*, close to the maximum bond-valence deficiency exhibited by Group F anions (Table 2). Table 4 lists the decavanadate surface O^{2-} ions that receive bonds from monovalent interstitial cations: Groups F, C, and G ions. With a maximum possible bond-valence of 0.33 *vu*, Na^+ could satisfy the bond-valence requirements of any of the external O^{2-} ions (Table 2) with a single bond. However, examination of direct bonds to decavanadate O^{2-} ions from monovalent interstitial cations (Table 4) shows that they are not that strong, with a maximum value of 0.19 *vu* for $^{[6]}Na^+$ bonded to Group G and Group F ions in huemulite and hughesite, respectively. There is one definite example of the bond-valence deficiency on a decavanadate O^{2-} ion in a mineral satisfied by a single bond from an interstitial cation. The O1 anion in magnesiopascoite has the following coordination: O1–V3 = 1.623 Å (1.63 *vu*); O1–Ca = 2.397 Å (0.30 *vu*); incident bond-valence sum = 1.93 *vu*, all H^+ ions were located and O1 is not a hydrogen-bond acceptor. Also, it is uncommon for a single decavanadate O^{2-} ion to accept more than one direct bond from an interstitial cation. The O1 anion in rakovanite has the following coordination: O1–V3 = 1.616 Å (1.66 *vu*); O1–Na = 2.632 Å (0.11 *vu*); O1–NH_4 = 2.934 Å (0.11 *vu*); incident bond-valence sum = 1.88 *vu*. It should be noted that positional disorder and partial occupancies observed in several of these minerals do not allow us to be definite on these issues for these minerals.

Direct linkage to the structural unit

The decavanadate polyanion can be viewed as an anionic surface on which bond-valence acceptors occur at 26 sites, the external O^{2-} ions requiring additional bond valence beyond that provided by the V^{4+},V^{5+} ions. The configuration of the O^{2-} sites at the surface of the decavanadate polyanion seems to be unsuitable for the formation of coordination polyhedra for the interstitial cations solely by O^{2-} ions of the vanadate units. The chemical bonds involving the (H_2O) groups are weak and compliant, and thus the presence of (H_2O) groups imparts a flexibility to the structures that allows the bonds from the interstitial species to more easily conform to the arrangement of

Downloaded from http://pubs.geoscienceworld.org/canmin/article-pdf/60/2/341/5579492/i1499-1276-60-2-341.pdf?casa_token=5vtN9F2UacIAAAAA:0IujIDr-RUgSWmTo078dd4CLNq
by University of Arizona user

TABLE 4. DECAVANADATE OXYGENS RECEIVING DIRECT BONDS FROM INTERSTITIAL NON-COMPLEX IONS

Mineral	Ion	Bonded O^{2-} ions	Incident bond-valence (*vu*)	Group
Burroite	$^{[8]}Ca^{2+}$	O14, O14′	0.14	F
Huemulite	$^{[6]}Na^{+}$	O12, O12′	0.19	G
Hughesite	$^{[6]}Na^{+}$	O14, O14′	0.19	F
Hydropascoite	$^{[8]}Ca^{2+}$	O14, O14′	0.26	F
		O12, O12′	0.26	G
"	$^{[8]}Ca^{2+}$	O13, O13′	0.20	F
Hummerite	$^{[10]}K^{+}$	O13, O13′	0.09	F
"	"	O14, O14′	0.18	F
"	"	O6, O6′	0.18	C
"	"	O10, O10′, O12, O12′	0.09	G
Lasalite	$^{[7]}Na^{+}$	O12, O12′	0.10	G
"	"	O8, O6′	0.17	C
Magnesiopascoite	$^{[7]}Ca^{2+}$	O13, O13′	0.22	F
"	"	O14, O14′	0.30	F
Pascoite	$^{[7]}Ca^{2+}$	O13, O13′	0.26	F
"	"	O14, O14′	0.28	F
Rakovanite	$^{[6]}Na^{+}$	O10	0.15	G
"	"	O10′	0.10	G
"	"	O13′	0.15	F
"	"	O14′	0.11	F

the external O^{2-} ions of the decavanadate unit than direct bonds from the interstitial cations.

(H_2O) groups are required to (1) help to form the coordination polyhedra for the interstitial cations, (2) act as bond-valence transformers to ensure accord with the valence-sum rule, and (3) carry the bond valence from the central interstitial cations to relatively distant O^{2-} ions of adjacent decavanadate units. These three points suggest an inverse relation between the amount of (H_2O) in the interstitial complex and the number of bonds between interstitial cations and the O^{2-} ions of the vanadate units. As noted in Table 4, some decavanadate minerals have their interstitial cations bonded both directly to the external O^{2-} ions of the decavanadate unit and to (H_2O) groups of the interstitial complex, *i.e.*, M^{n+}–$^{V}O^{2-}$ bonds. Direct linkage between the interstitial (simple) cations and the decavanadate units varies from zero where fully hydrated, as for $\{^{[6]}Na(H_2O)_6\}^{1+}$ in rakovanite, to extensive, as for $\{^{[7]}Na(H_2O)_2\}^{1+}$ in gunterite in which Na^{+} forms three bonds to one D and two C anions of one decavanadate unit and two bonds to G anions on neighboring decavanadate units (Table 4).

These M^{n+}–$^{V}O^{2-}$ bonds were counted for the $[V^{5+}{}_{10}O^{2-}{}_{28}]^{6-}$ oxopolyanion in each structure by examining the coordination of each external O^{2-} ion of the $[V_{10}O_{28}]$ unit. The bond-valence curve of García-Rodríguez *et al.* (2000) for $(NH_4)^{+}$–O^{2-} was used to identify bonds between interstitial $(NH_4)^{+}$ and O^{2-} ions of the $[V_{10}O_{28}]$ unit. Figure 8 shows the data for the 17 decavanadate minerals containing the $[V^{5+}{}_{10}O_{28}]^{6-}$ polyanion (Table 1). There is an inverse correlation between the number of bonds and the number of (H_2O) groups, but the scatter in this relation increases with increase in the amount of H_2O (Fig. 8).

Unit-cell volume

The decavanadate minerals show a large range in unit-cell volume, *V* (normalized to one $[V_{10}O_{28}]$ polyanion), varying from 854.08 Å^3 in schindlerite to 1163.15 Å^3 in okieite. As the $[V_{10}O_{28}]$ polyanions themselves are relatively invariant, the variation in *V* must be related to variation in the species of the interstitial complex. Compare the compositions of pascoite and okieite (Table 1). Both contain three divalent interstitial cations (pascoite: 3 Ca^{2+}, okieite: 3 Mg^{2+}), both have close to the same amount of (H_2O) bonded to these cations [pascoite: 17 (H_2O), okieite: 18 (H_2O)], pascoite has no $\{H_2O\}$ and okieite has 10 $\{H_2O\}$, and neither has direct linkage of neighboring decavanadate units by M^{n+}–$^{V}O^{2-}$ bonds. Pascoite has some M^{n+}–$^{V}O^{2-}$ bonds, but the resulting

Downloaded from http://pubs.geoscienceworld.org/canmin/article-pdf/60/2/341/5579492/i1499-1276-60-2-341.pdf?casa_token=5vtN9F2UacIAAAAA:0IujIDr-RUgSWmTo078dd4CLNq by University of Arizona user

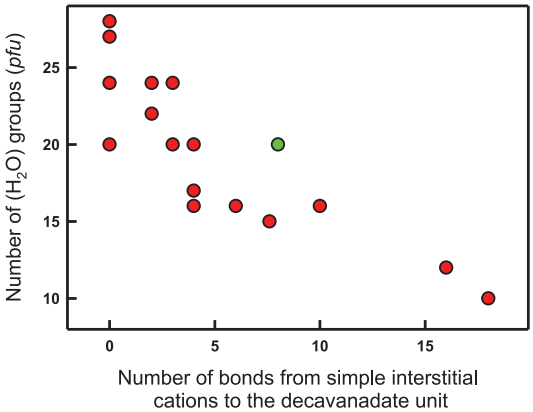

FIG. 8. Number of interstitial (H_2O) groups *versus* the number of direct bonds from interstitial cations (× the multiplicity of that cation) to the decavanadate unit. The value for gunterite is shown in green and deviates strongly from the pattern of the other minerals.

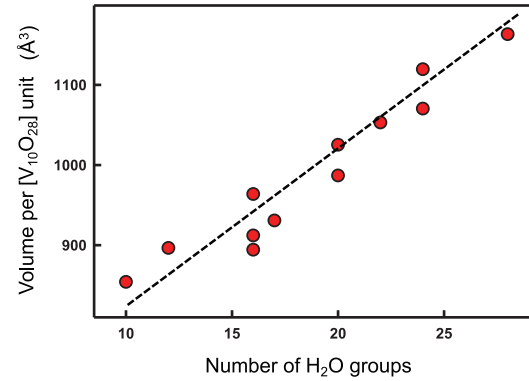

FIG. 9. Cell volume per decavanadate unit as a function of the number of H_2O groups in decavanadate minerals.

($^{[7]}Ca^{2+}(H_2O)_5)^{2+}$ polycation is attached directly only to one decavanadate unit. Pascoite has an adjusted unit-cell volume of 930.55 Å^3, whereas okieite has an adjusted unit-cell volume of 1163.15 Å^3.

The large difference in unit-cell volume thus seems to be due to the difference in the amount of {H_2O}; is this a reasonable supposition? {H_2O} is held in a structure solely by hydrogen bonds and the structures of the ice polymorphs would seem a good model for estimating the effective size of an {H_2O} group. The crystal structures of ice-Ih (Fortes *et al*. 2004) and ice-VII (Tschauner *et al*. 2018) give a volume of {H_2O} of ~32 Å^3. However, the volume of {H_2O} calculated from the difference in unit-cell volumes of pascoite and okieite is 23.3 Å^3, significantly different from the value for the ice polymorphs, and this value is reasonably consistent with the variation in unit-cell volume (normalized to one decavanadate unit) as a function of the number of H_2O groups in the decavanadate minerals (Fig. 9). Let us consider the structures of $Mg(SO_4)\cdot nH_2O$ (Hawthorne & Sokolova 2012) in which the volumes of the $(Mg^{2+}O_6)^{2+}$ and $(S^{6+}O_4)^{2-}$ polyhedra are fixed across the series and different polymerizations do not affect their aggregate volume. The variation in unit-cell volume as a function of the amount of H_2O, n, is shown in Figure 10. For $n = 1$ to 4, 6, only (H_2O) is present, whereas for $n = 7$ and 11, (H_2O) is fixed at 6 and only {H_2O} increases. The increase in unit-cell volume per (H_2O) is 24.7 Å^3 and the increase in unit-cell volume per {H_2O} is 27.0 Å^3. These values are reasonably similar to the value of 23.3 Å^3 calculated assuming that the change in unit-cell volume in the decavanadate minerals is due to the variation in H_2O content. The difference in volumes for (H_2O) and {H_2O} in the $Mg(SO_4)\cdot nH_2O$ structures, 2.3 Å^3 per H_2O group, suggests that differences in the relative amounts of each of these groups will only have a minor perturbation on the overall relation in Figure 9.

SUMMARY

(1) The pascoite-family minerals contain [$V_{10}O_{28}$] decavanadate polyanions (structural unit) that are linked together by cations and (H_2O) of the interstitial complex.

(2) The [$V_{10}O_{28}$] unit consists of four different types: (1) a $[V^{5+}{}_{10}O_{28}]^{6-}$ unit, (2) a mixed-valence $[(V^{4+}{}_{x}V^{5+}{}_{10-x})O_{28}]^{(6+x)-}$ unit, (3) a protonated

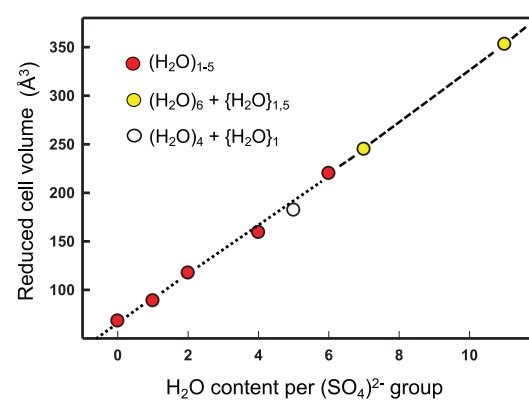

FIG. 10. Cell volume per sulfate group as a function of the number of H_2O groups in the $Mg(SO_4)\cdot nH_2O$ structures.

Downloaded from http://pubs.geoscienceworld.org/canmin/article-pdf/60/2/341/5579492/i1499-1276-60-2-341.pdf?casa_token=5vtN9F2UacIAAAAA:0IujIDr-RUgSWmTo078dd4CLNq by University of Arizona user

$[H_yV_{10}O_{28}]^{(6-y)-}$ unit, and (4) a protonated mixed-valence $[(H^+_yV^{4+}_xV^{5+}_{10-x})O_{28}]^{(6+x-y)-}$ unit.

(3) The $[V_{10}O_{28}]$ unit has pseudosymmetry 2/*m*2/*m*2/*m*, and the constituent O^{2-} ions were divided into seven groups on the basis of (pseudo) symmetry and labeled A–G by Day *et al*. (1987). The O^{2-} ions may be divided into different types: (1) *internal*, which cannot bond to the interstitial complex, Group A, and (2) *external*, which accept bonds from the interstitial complex, Groups B–G. The bond valence required from the interstitial complex to satisfy the valence-sum rule varies systematically with ion group.

(4) Linkage between the decavanadate unit and the interstitial complex is examined using the principle of correspondence of Lewis acidity-basicity, a mean-field equivalent of the valence-matching principle.

(5) The Lewis base strengths of the various decavanadate polyanions vary from 0.054 to 0.154 *vu*.

(6) The principle of correspondence of Lewis acidity-basicity shows that $[V_{10}O_{28}]$ structures can form from the simple cations Cs^+, Rb^+, K^+, Tl^+, and Na^+. Simple cations with higher Lewis acidities (*e.g.*, Ba^{2+}, Ca^{2+}, Mg^{2+}, Al^{3+}) are too acid to form structures by themselves; they must bond to transformer (H_2O) groups to moderate their Lewis acidity.

(7) Cations may bond to transformer (H_2O) groups to form polyatomic cations that have lower Lewis acidities than the corresponding simple cation, *e.g.*, $\{Al^{3+}(H_2O)_6\{H_2O\}_{12}\}^{3+}$, LA (Lewis acidity) = 0.125 *vu*; $\{Ca^{2+}(H_2O)_8\{H_2O\}_{16}\}^{2+}$, LA = 0.063 *vu*.

(8) The occurrence of the complex polyatomic cation $\{(V^{5+}O_2)Al_{10}(OH)_{20}(H_2O)_{18}\}^{11+}$, a substituted version of the well-known flat-Al_{13} cluster $\{Al_{13}(OH)_{24}(H_2O)_{24}\}^{15+}$, in caseyite shows the potential of decavanadate structures to incorporate large complex heteropolycations into their structures.

(9) There is an inverse relation between the amount of H_2O in the interstitial complex and the number of bonds between interstitial simple cations and the O^{2-} ions of the vanadate units. There is no direct bonding between simple interstitial cations and the O^{2-} ions at the surface of the decavanadate group for ~24–28 H_2O groups, suggesting that 28 is the maximum number of interstitial (H_2O) groups in the formula unit of a decavanadate structure.

(10) The occurrence of both polyoxometalate anions and polyoxometalate cations in the same crystal structure (*e.g.*, protocaseyite, caseyite) suggests that co-crystallization of such units could provide a strategy for crystallization of synthetic phases containing species that are in aqueous solution but not readily incorporated into crystalline phases.

Acknowledgments

This work was supported by a Discovery Grant from the Natural Sciences and Engineering Research Council of Canada and by grants from the Canada Foundation for Innovation to FCH; by the U.S. National Science Foundation through grants NSF-MRI 1039436 and EAR-1249459 to JMH. Particularly insightful comments from an anonymous reviewer are greatly appreciated and, as always, the Editorial Staff of *The Canadian Mineralogist* is thanked for their work on behalf of the entire mineralogical community.

References

Brown, I.D. (1981) The bond-valence method: An empirical approach to chemical structure and bonding. *In* Structure and Bonding in Crystals II (M. O'Keeffe & A. Navrotsky, eds.). Academic Press, New York (1–30).

Brown, I.D. (2002) *The Chemical Bond in Inorganic Chemistry. The Bond Valence Model*. Oxford University Press, U.K.

Brown, I.D. (2009) Recent developments in the methods and applications of the bond valence model. *Chemical Reviews* **109**, 6858–6919.

Brown, I.D. (2016) *The Chemical Bond in Inorganic Chemistry. The Bond Valence Model*. 2nd Edition. Oxford University Press, U.K.

Brown, I.D. & Altermatt, D. (1985) Bond-valence parameters obtained from a systematic analysis of the inorganic crystal structure database. *Acta Crystallographica* **B41**, 244–247.

Carter, W.D. & Gualtieri, J.L. (1965) Geology and uranium–vanadium deposits of the La Sal quadrangle, San Juan County, Utah, and Montrose County, Colorado. *United States Geological Survey Professional Paper* **508**.

Casey, W.H. (2006) Large aqueous aluminum hydroxide molecules. *Chemical Reviews* **106**, 1–16.

Colombo, F., Baggio, R., & Kampf, A.R. (2011) The crystal structure of the elusive huemulite. *Canadian Mineralogist* **49**, 849–864.

Cooper, M.A., Hawthorne, F.C., Kampf, A.R., & Hughes, J.M. (2019a) Determination of V^{4+}:V^{5+} ratios in the $[V_{10}O_{28}]^{n-}$ decavanadate polyanion. *Canadian Mineralogist* **57**, 235–244.

Downloaded from http://pubs.geoscienceworld.org/canmin/article-pdf/60/2/341/5579492/i1499-1276-60-2-341.pdf?casa_token=5vtN9F2UaclAAAAA:0IujIDr-RUgSWmTo078dd4CLNq by University of Arizona user

Cooper, M.A., Hawthorne, F.C., Kampf, A.R., & Hughes, J.M. (2019b) Identifying protonated decavanadate polyanions. *Canadian Mineralogist* **57**, 245–253.

Day, V.W., Klemperer, W.G., & Maltbie, D.J. (1987) Where are the protons in $H_3V_{10}O_{28}^{3-}$? *Journal of the American Chemical Society* **109**, 2991–3002.

Evans, H.T., Jr. (1966) The molecular structure of the isopoly complex ion, decavanadate ($V_{10}O_{28}^{6-}$). *Contributions from the U.S. Geological Survey* **5**, 967–977.

Evans, H.T., Jr. & Garrels, R.M. (1958) Thermodynamic equilibria of vanadium in aqueous systems as applied to the interpretation of the Colorado Plateau ore deposits. *Geochimica et Cosmochimica Acta* **15**, 131–149.

Fortes, A.D., Wood, I.G., Grigoriev, D., Alfredsson, M., Kipfstuhl, S., Knight, K.S., & Smith, R.I. (2004) No evidence for large-scale proton ordering in Antarctic ice from powder neutron diffraction. *Journal of Chemical Physics* **120**, 11376–11379.

Gagné, O.C. & Hawthorne, F.C. (2015) Comprehensive derivation of bond-valence parameters for ion pairs involving oxygen. *Acta Crystallographica* **B71**, 562–578.

Gagné, O.C. & Hawthorne, F.C. (2016) Bond-length distributions for ions bonded to oxygen: Alkali and alkaline-earth metals. *Acta Crystallographica* **B72**, 602–625.

Gagné, O.C. & Hawthorne, F.C. (2017) Empirical Lewis-acid strengths for 135 cations bonded to oxygen. *Acta Crystallographica* **B73**, 956–961.

Gagné, O.C. & Hawthorne, F.C. (2018) Bond-length distributions for ions bonded to oxygen: Results for the non-metals and discussion of lone-pair stereoactivity and the polymerization of PO_4. *Acta Crystallographica* **B74**, 79–96.

García-Rodríguez, L., Rute-Pérez, Á., Piñero, J.R., & González-Silgo, C. (2000) Bond-valence parameters for ammonium-anion interactions. *Acta Crystallographica* **B56**, 565–569.

Gordillo, C.E., Linares, E., Toubes, R.O., & Winchell, H. (1966) Huemulite, $Na_4MgV_{10}O_{28}\cdot 24H_2O$, a new hydrous sodium and magnesium vanadate from Huemul mine, Mendoza Province, Argentina. *American Mineralogist* **51**, 1–13.

Hawthorne, F.C. (1983) Graphical enumeration of polyhedral clusters. *Acta Crystallographica* **A39**, 724–736.

Hawthorne, F.C. (1985) Towards a structural classification of minerals: The $^{VI}M^{IV}T_2\varphi_n$ minerals. *American Mineralogist* **70**, 455–473.

Hawthorne, F.C. (1986) Structural hierarchy in $^{VI}M_x^{III}T_y\varphi_z$ minerals. *Canadian Mineralogist* **24**, 625–642.

Hawthorne, F.C. (1990) Structural hierarchy in $^{[6]}M^{[4]}T\varphi_n$ minerals. *Zeitschrift für Kristallographie* **192**, 1–52.

Hawthorne, F.C. (1992) The role of OH and H_2O in oxide and oxysalt minerals. *Zeitschrift für Kristallographie* **201**, 183–206.

Hawthorne, F.C. (2012) A bond-topological approach to theoretical mineralogy: Crystal structure, chemical composition and chemical reactions. *Physics and Chemistry of Minerals* **39**, 841–874.

Hawthorne, F.C. (2015) Toward theoretical mineralogy: A bond-topological approach. *American Mineralogist* **100**, 696–713.

Hawthorne, F.C. & Schindler, M. (2008) Understanding the weakly bonded constituents in oxysalt minerals. *Zeitschrift für Kristallographie* **223**, 41–68.

Hawthorne, F.C. & Sokolova, E. (2012) The role of H_2O in controlling bond topology: The $^{[6]}Mg(SO_4)(H_2O)_n$ (n = 0-6) structures. *Zeitschrift für Kristallographie* **227**, 594–603.

Hillebrand, W.F., Merwin, H.E., & Wright, F.E. (1914) Hewettite, metahewettite and pascoite, hydrous calcium vanadates. *Proceedings of the American Philosophical Society* **53(213)**, 31–54.

Hughes, J.M., Schindler, M., Rakovan, J., & Cureton, F.E. (2002) The crystal structure of hummerite, $KMg(V_5O_{14})\cdot 8H_2O$: Bonding between the $[V_{10}O_{28}]^{6-}$ structural unit and the $\{K_2Mg_2(H_2O)_{16}\}^{6+}$ interstitial complex. *Canadian Mineralogist* **40**, 1429–1435.

Hughes, J.M., Schindler, M., & Francis, C.A. (2005) The *C*2/*m* disordered structure of pascoite, $Ca_3(V_{10}O_{28})\cdot 17H_2O$. *Canadian Mineralogist* **43**, 1379–1386.

Hughes, J.M., Wise, W.S., Gunter, M.E., Morton, J.P., & Rakovan, J. (2008) Lasalite, $Na_2Mg_2[V_{10}O_{28}]\cdot 20H_2O$, a new decavanadate mineral species from the Vanadium Queen Mine, La Sal District, Utah: Description, atomic arrangement, and relationship to the pascoite group of minerals. *Canadian Mineralogist* **46**, 1365–1372.

Hutin, M., Rosnes, M.H., Long, D.-L., & Cronin, L. (2013) Polyoxometalates: Synthesis and structure – From building blocks to emergent structures. *In* Comprehensive Inorganic Chemistry II (J. Reedijk & K. Poeppelmeier, eds.). Elsevier, Oxford, U.K. (241–269).

Kampf, A.R. & Steele, I.M. (2008) Magnesiopascoite, a new member of the pascoite group: Description and crystal structure. *Canadian Mineralogist* **46**, 679–686.

Kampf, A.R., Hughes, J.M., Marty, J., & Nash, B. (2011a) Gunterite, $Na_4(H_2O)_{16}(H_2V_{10}O_{28})\cdot 6H_2O$, a new mineral with a doubly-protonated decavanadate polyanion: Crystal structure and descriptive mineralogy. *Canadian Mineralogist* **49**, 1243–1251.

Kampf, A.R., Hughes, J.M., Marty, J., Gunter, M.E., & Nash, B. (2011b) Rakovanite, $Na_3\{H_3[V_{10}O_{28}]\}\cdot 15H_2O$, a new species of the pascoite family with a protonated decavanadate polyanion. *Canadian Mineralogist* **49**, 595–604.

Downloaded from http://pubs.geoscienceworld.org/canmin/article-pdf/60/2/341/5579492/i1499-1276-60-2-341.pdf?casa_token=5vtN9F2UaclAAAAA:0IujIDr-RUgSWmTo078dd4CLNq
by University of Arizona user

Kampf, A.R., Hughes, J.M., Marty, J., & Nash, B. (2012) Postite, $Mg(H_2O)_6Al_2(OH)_2(H_2O)_8(V_{10}O_{28})\cdot 13H_2O$, a new mineral species from the La Sal mining district, Utah: Crystal structure and descriptive mineralogy. *Canadian Mineralogist* **50**, 45–53.

Kampf, A.R., Hughes, J.M., Marty, J., & Nash, B.P. (2013a) Wernerbaurite, $\{[Ca(H_2O)_7]_2(H_2O)_2(H_3O)_2\}\{V_{10}O_{28}\}$, and schindlerite, $\{[Na_2(H_2O)_{10}](H_3O)_4\}\{V_{10}O_{28}\}$, the first hydronium-bearing decavanadate minerals. *Canadian Mineralogist* **51**, 297–312.

Kampf, A.R., Hughes, J.M., Marty, J., & Brown, F.H. (2013b) Nashite, $Na_3Ca_2([V^{5+}{}_9V^{4+}{}_1]O_{28})\cdot 24H_2O$, a new mineral species from the Yellow Cat Mining District, Utah and the Slick Rock Mining District, Colorado: Crystal structure and descriptive mineralogy. *Canadian Mineralogist* **51**, 27–37.

Kampf, A.R., Hughes, J.M., Nash, B.P., & Marty, J. (2014a) Kokinosite, $Na_2Ca_2(V_{10}O_{28})\cdot 24H_2O$, a new decavanadate mineral species from the St. Jude mine, Colorado: Crystal structure and descriptive mineralogy. *Canadian Mineralogist* **52**, 15–25.

Kampf, A.R., Hughes, J.M., Marty, J., Nash, B.P., Chen, Y.-S., & Steele, I.M. (2014b) Bluestreakite, $K_4Mg_2(V^{4+}{}_2V^{5+}{}_8O_{28})\cdot 14H_2O$, a new mixed-valence decavanadate mineral from the Blue Streak Mine, Montrose County, Colorado: Crystal structure and descriptive mineralogy. *Canadian Mineralogist* **52**, 1007–1018.

Kampf, A.R., Hughes, J.M., Nash, B.P., Marty, J., Cooper, M.A., Hawthorne, F.C., Karpenko, V.Y., Pautov, L.A., & Agakhanov, A.A. (2016) Revision of the formulas of wernerbaurite and schindlerite: Ammonium- rather than hydronium-bearing decavanadate minerals. *Canadian Mineralogist* **54**, 555–558.

Kampf, A.R., Nash, B.P., Marty, J., & Hughes, J.M. (2017a) Burroite, $Ca_2(NH_4)_2(V_{10}O_{28})\cdot 15H_2O$, a new decavanadate mineral from the Burro mine, San Miguel County, Colorado. *Canadian Mineralogist* **55**, 473–481.

Kampf, A.R., Nash, B.P., Marty, J., Hughes, J.M., & Rose, T.P. (2017b) Hydropascoite, $Ca_3(V_{10}O_{28})\cdot 24H_2O$, a new decavanadate mineral from the Packrat mine, Mesa County, Colorado. *Canadian Mineralogist* **55**, 207–217.

Kampf, A.R., Nash, B.P., Adams, P.M., Marty, J., & Hughes, J.M. (2018) Ammoniolasalite, $[(NH_4)_2Mg_2(H_2O)_{20}][V_{10}O_{28}]$, a new decavanadate species from the Burro mine, Slick Rock district, Colorado. *Canadian Mineralogist* **56**, 859–869.

Kampf, A.R., Cooper, M.A., Hughes, J.M., Nash, B.P., Hawthorne, F.C., & Marty, J. (2020a) Caseyite, a new mineral containing a variant of the flat-Al_{13} polyoxometalate cation. *American Mineralogist* **105**, 123–131.

Kampf, A.R., Adams, P.M., Nash, B.P., Marty, J., & Hughes, J.M. (2020b) Okieite, $Mg_3[V_{10}O_{28}].28H_2O$, a new decavanadate mineral from the Burro mine, Slick Rock district, San Miguel County, Colorado, USA. *Canadian Mineralogist* **58**, 125–135.

Kampf, A.R., Cooper, M.A., Hughes, J.M., Ma, C., Hawthorne, F.C., Casey, W.H., & Marty, J. (2021a) Protocaseyite, a new decavanadate mineral containing a $[Al_4(OH)_6(H_2O)_{12}]^{6+}$ linear tetramer, a novel isopolycation. *American Mineralogist* (accepted).

Kampf, A.R., Hughes, J.M., Cooper, M.A., Hawthorne, F.C., Nash, B.P., Olds, T.A., Adams, P.M., & Marty, J. (2021b) The pascoite family of minerals, including the redefinition of rakovanite. *Canadian Mineralogist* **59**, 771–779.

Kampf, A.R., Cooper, M.A., Hawthorne, F.C., Hughes, J.M., Nash, B.P., & Adams, P.M. (2022) The redefinition of gunterite, $Na_4Ca[V_{10}O_{28}]\cdot 20H_2O$. *Canadian Mineralogist* **60**, this issue.

Katsoulis, D. (1998) A survey of applications of polyoxometalates. *Chemistry of Materials* **98**, 359–387.

Olds, T.A., Kampf, A.R., Cooper, M.A., Adams, P.M., & Marty, J. (2020) Trebiskyite, IMA 2019-131. CNMNC Newsletter No. 55. *Mineralogical Magazine* **84**, 486.

Rakovan, J., Schmidt, G.R., Gunter, M., Nash, B., Kampf, A.R., Marty, J., & Wise, W.S. (2011) Hughesite, $Na_3Al(V_{10}O_{28})\cdot 22H_2O$, a new member of the pascoite family of minerals from the Sunday mine, San Miguel County, Colorado. *Canadian Mineralogist* **49**, 1253–1265.

Rigotti, G., Rivero, B.E., & Castellano, E.E. (1987) The pseudo-orthorhombic structure of cesium dihydrogendecavanadate tetrahydrate. *Acta Crystallographica* **C43**, 197–201.

Schindler, M., Hawthorne, F.C., & Baur, W.H. (2000a) Crystal-chemical aspects of vanadium: Polyhedral geometries, characteristic bond valences and polymerization of (VO_n) polyhedra. *Chemistry of Materials* **12**, 1248–1259.

Schindler, M., Hawthorne, F.C., & Baur, W.H. (2000b) A crystal-chemical approach to the composition and occurrence of vanadium minerals. *Canadian Mineralogist* **38**, 1443–1456.

Seichter, W., Moegel, H.J., Brand, P., & Salah, D. (1998) Crystal structure and formation of the aluminum hydroxide chloride $[Al_{13}(OH)_{24}(H_2O)_{24}]Cl_{15}\times 13(H_2O)$. *European Journal of Inorganic Chemistry* **1998,** 795–797.

Shawe, D.R. (2011) Uranium-vanadium deposits of the Slick Rock district, Colorado. *United States Geological Survey Professional Paper* **576-F**.

Tschauner, O., Huang, S., Greenberg, E., Prakapenka, V.B., Ma, C., Rossman, G.R., Shen, A.H., Zhang, D., Newville, M., Lanzirotti, A., & Tait, K. (2018) Ice-VII inclusions in diamonds: Evidence for aqueous fluid in Earth's deep mantle. *Science* **359**, 1136–1139.

Downloaded from http://pubs.geoscienceworld.org/canmin/article-pdf/60/2/341/5579492/i1499-1276-60-2-341.pdf?casa_token=5vtN9F2UaclAAAAA:0IujIDr-RUgSWmTo078dd4CLNq by University of Arizona user

Weeks, A.D., Cisney, E.A., & Sherwood, A.M. (1951) Hummerite and montroseite, two vanadium minerals from Montrose County, Colorado. *American Mineralogist* **36**, 326–327.

Yakubovich, O.V., Steele, I.M., Yakovleva, E.V., & Dimitrova, O.V. (2015) One-dimensional decavanadate chains in the crystal structure of $Rb_4[Na(H_2O)_6][HV_{10}O_{28}]\cdot 4H_2O$. *Acta Crystallographica* **C71**, 465–473.

Received July 11, 2021. Revised manuscript accepted November 20, 2021.

Downloaded from http://pubs.geoscienceworld.org/canmin/article-pdf/60/2/341/5579492/i1499-1276-60-2-341.pdf?casa_token=5vtN9F2UaclAAAAA:0IujIDr-RUgSWmTo078dd4CLNq
by University of Arizona user