Zeitschrift für Kristallographie 199, 25–48 (1992)
© by R. Oldenbourg Verlag, München 1992 – 0044-2968/92 $3.00 + 0.00

Crystal structure of rhodesite, $HK_{1-x}Na_{x+2y}Ca_{2-y}\{lB,3,2^2_\infty\}[Si_8O_{19}] \cdot (6-z)\,H_2O$, from three localities and its relation to other silicates with dreier double layers

K.-F. Hesse, F. Liebau

Mineralogisches Institut der Universität Kiel, D-2300 Kiel, Federal Republic of Germany

and S. Merlino

Istituto di Mineralogia e Petrografia, Università degli studi di Pisa, Italy

Dedicated to Professor Dr. Karl Fischer on the occasion of his 65th birthday

Received: December 21, 1990

Rhodesite / Macdonaldite / Monteregianite / Delhayelite / Hydrodelhayelite / Layer silicates / Double-layer silicates

Abstract. Rhodesite from Zeilberg, Unterfranken, Germany (**Z**), from Trinity County, California, USA (**TC**), and from San Venanzo, Rieti, Italy (**SV**), is orthorhombic with space group *Pmam*.

Crystallographic data, given in the order (**Z**), (**TC**), (**SV**), are: $a_0 = 23.416(5)/23.444(5)/23.428(20)$ Å, $b_0 = 6.555(1)/6.553(1)/6.557(8)$ Å, $c_0 = 7.050(1)/7.055(1)/7.064(8)$ Å, $Z = 2$, $D_x = 2.268(1)/2.264(1)/2.261(4)$ g $\cdot$ cm^{-3} calculated for $HKCa_2Si_8O_{19} \cdot 5H_2O$. The crystal structure was refined to R(unweighted) = 0.044/0.079/0.044 and R(weighted) = 0.036/0.055/0.045 using 939/898/536 non-equivalent reflections. The structure contains loop-branched dreier double layers of corner-sharing $[SiO_4]$ tetrahedra. Channel-like pores running parallel to [010] and [001] between the two sublayers of a double layer are occupied by potassium ions and water molecules. Adjacent double layers are held together by rather strong hydrogen bonds (ca. 2.60 Å) and by two sets of calcium ions which are octahedrally coordinated by six terminal oxygen atoms from the silicate layers, and by four terminal oxygen atoms plus two water molecules, respectively.

Correspondence author: Prof. F. Liebau.

Although no sodium has been found during refinement of the site occupation factors it is concluded from comparison with the closely related crystal structures of delhayelite, hydrodelhayelite, macdonaldite and monteregianite that stoichiometric rhodesite is the sodium-free endmember of a solid solution $HK_{1-x}Na_{x+2y}Ca_{2-y}\{\boldsymbol{lB},3,2^2_\infty\}[Si_8O_{19}] \cdot (6-z)\ H_2O$. Conditions for the formation of double-layer silicates of the rhodesite family in nature and for their synthesis are discussed.

1. Introduction

Rhodesite has first been described by Mountain (1957) as an alkali calcium silicate hydrate from the Bultfontein Mine, Kimberley, South Africa. Gard and Taylor (1957) published crystallographic data and deduced from a chemical analysis made by Chalmers that the composition is "approximately $(Ca, Na_2, K_2)_{16}Si_{32}O_{80} \cdot 22H_2O$" with "atomic cell-contents calculated" for Ca, Na and K ca. 4.3, 2.7 and 2.0, respectively. Sheppard and Gude (1969) discovered rhodesite in a deposit of magadiite, $NaSi_7O_{13}(OH)_3 \cdot 3H_2O$, near Redding, Trinity County, California, USA, and gave its composition as $Ca_{4.23}Mg_{0.27}Na_{0.60}K_{1.95}Si_{17.11}O_{40} \cdot 10.94H_2O$. From a third locality, Zeilberg, Unterfranken, Germany, rhodesite crystals of good quality have been described (Jakob, 1976).

Gard and Taylor (1957) deduced from lattice constants, zeolitic water content and compositional similarity that rhodesite is probably structurally related to the fibrous zeolites such as thomsonite, $NaCa_2[(Al_5Si_5)O_{20}] \cdot 6H_2O$. In 1968 Cannillo, Rossi and Ungaretti, after solving the crystal structure of macdonaldite, $H_2Ca_4Ba[Si_8O_{19}]_2 \cdot 10.4H_2O$, pointed out that rhodesite as well as delhayelite, $(Na_3Ca)Ca_4K_7[(AlSi_7)O_{19}]_2Cl_2F_4$, the structure of which the same authors published in 1970, probably have silicate double layers which are similar to those in delhayelite. Ragimov, Chiragov, Mamedov, and Dorfman (1980) described the crystal structure of hydrodelhayelite, $H_2KCa_2[(AlSi_7)O_{19}] \cdot 6H_2O$, to have essentually the same double layers as delhayelite. Eventually, Ghose, Sen Gupta and Campana (1987) determined the structure of monteregianite, $Na_4K_2Y_2[Si_{16}O_{38}] \cdot 10H_2O$, and assigned this mineral to the same family of double-layer silicates.

This paper deals with structure determinations of rhodesite which have been carried out independently on single crystals from Zeilberg and Trinity County (Hesse) and from San Venanzo (Merlino) and reports on optical data. The relationships between the crystal structures of rhodesite, delhayelite, hydrodelhayelite, macdonaldite, and monteregianite are discussed and conclusions drawn about the chemical composition of rhodesite (Liebau). A short description of the rhodesite structure has already been given by Hesse (1987).

Table 1. Optical data and density of rhodesite from Zeilberg, Unterfranken.

Parameter	Value	Orientation
n_α^D	1.5035(10)	parallel [010]
n_β^D	1.508(2)	parallel [100]
n_γ^D	1.5180(10)	parallel [001] (needle axis)
$2V_\gamma^D$ (calc)	68.1°	
Optic sign	(+)	
$\Delta n_\alpha^{(F-C)}$	0.0080	
$\Delta n_\beta^{(F-C)}$	0.0075	
$\Delta n_\gamma^{(F-C)}$	0.0070	
D_{exp} [g · cm^{-3}]	2.27	

Rhodesite from Zeilberg, Trinity County and San Venanzo are indicated as **Z**, **TC** and **SV** respectively, corresponding values are given in the order **Z/TC/SV**.

2. Experimental

From a rhodesite sample from Zeilberg which had kindly been provided by H. Jakob, Stegaurach, perfectly clear needles were separated for optical and X-ray studies. Non-transparent fragments were used for X-ray studies of the material from East Fork Trinity River, Trinity County, purchased from Minerals Unlimited, Ridgecrest, California; crystals from San Venanzo, Rieti, Italy, had kindly been supplied by the collector Gianni Porcellini.

Table 1 lists optical data of **Z** as determined using the λ-variation method and the density as measured by floating in a mixture of methylen iodide and benzene (Midgley, 1951).

Intensity data collections were carried out on Philips PW1100 four-circle automatic diffractometers using graphite monochromatized Mo$K\alpha$ radiation ($\lambda = 0.7107$ Å) and ω-2θ scan mode for **Z** and **TC** and ω scan mode for **SV**. Refined unit-cell parameters were determined for **Z** and **TC** with the program LAT written by Hornstra and Vossers (1973/74) using 48 single crystal reflections each and for **SV** by least-squares fitting of 22θ-values measured on the automatic diffractometer. Systematic absences indicated *Pmam*, *P2am* (*Pma2*) and $P2_1am$ ($Pma2_1$) as possible space groups; the structures of rhodesite from all three localities refined in *Pmam*.

Some details of data collection and structure refinement are given in Table 2.

An initial set of atomic coordinates was obtained for **Z** and **SV** from model building based on the structures of delhayelite and macdonaldite.

Table 2. Unit-cell parameters and conditions of refinement for rhodesite from three different localities.

Parameter	Zeilberg	Trinity County	San Venanzo
Crystal size [mm]	$0.050 \times 0.050 \times 0.675$	$0.075 \times 0.038 \times 0.150$	$0.016 \times 0.032 \times 0.330$
$2\theta_{max}$ [°]	60	70	50
a_0 [A]	23.416(5)	23.444(5)	23.428(20)
b_0 [Å]	6.555(1)	6.553(1)	6.557(8)
c_0 [Å]	7.050(1)	7.055(1)	7.064(8)
V [Å^3]	1082.1(3)	1083.9(3)	1085.2(2.0)
h_{min}, h_{max}	0, 32	0, 30	−28, 28
k_{min}, k_{max}	0, 9	0, 9	0, 7
l_{min}, l_{max}	0, 9	0, 11	0, 8
reflections recorded	1878	1497	940[a]
non-equivalent reflections	1878	1497	536
reflections			
$I \geq 1.0\ \sigma(I)$	–	–	536
$I \geq 1.5\ \sigma(I)$	939	–	–
$I \geq 2.0\ \sigma(I)$	–	898	–
absorption correction	no	no	no
extinction correction	no	no	no
R	0.044	0.079	0.044
R_w [$w = 1/\sigma^2(F_0)$]	0.036	0.055	0.045

[a] 1313 reflections were skipped on the basis of a pre-scan test as they had $I_{top} - 2\sqrt{I_{top}} < I_{back}$.

The final atomic coordinates obtained for **Z** were used as starting set for **TC**. The coordinates were refined by full-matrix least-squares procedure with the program SHELX-76 (Sheldrick 1976) for **Z** and **TC** and with the program X-ray 70 (Stewart 1970) for **SV**. Atomic scattering factors for neutral atoms were taken for **SV** from International Tables for X-ray Crystallography Vol. III (1962), and for **Z** and **TC** from International Tables for X-ray Crystallography Vol. IV (1974) (Na, K, Ca) and from Cromer and Mann (1968) (Si, O). Final coordinates obtained by anisotropic refinement are listed in Table 3, interatomic distances and angles in Tables 4 and 5[1]. Hydrogen atoms have not been located reliably enough to be tabulated.

[1] Tables 4, 5 and 9 and lists of observed and calculated structure factors and anisotropic thermal parameters can be ordered from the Fachinformationszentrum Energie-Physik-Mathematik GmbH, D-7514 Eggenstein-Leopoldshafen 2, FRG. Please quote reference no. 54306, the names of the authors and the title of the paper.

Table 3. Atomic coordinates, isotropic equivalent thermal parameters $U_{eq} = 1/3 (U_{11} + U_{22} + U_{33})$ and site occupation factors (s.o.f.) of rhodesite from Zeilberg, Germany (first-lines), Trinity County, USA (second lines), and San Venanzo, Italy (third lines). Data for O(W11) are only tabulated for rhodesite from San Venanzo. The standard deviations in parentheses refer to the last digit.

Atom	Site symmetry	Wyckoff position	x	y	z	$U_{eq} \cdot 10^3$ [Å^2]	s.o.f.
K	$mm2$	$2e$	0.2500	0.4449(6)	0.0000	32(2)	0.249(2)
			0.2500	0.4460(9)	0.0000	33(3)	0.255(3)
			0.2500	0.4487(10)	0.0000	36(3)	0.250
Ca(1)	$2/m$	$2c$	0.0000	0.5000	0.0000	14(1)	0.253(2)
			0.0000	0.5000	0.0000	15(2)	0.246(2)
			0.0000	0.5000	0.0000	15(3)	0.250
Ca(2)	$2/m$	$2d$	0.0000	0.5000	0.5000	11(1)	0.251(2)
			0.0000	0.5000	0.5000	10(2)	0.248(3)
			0.0000	0.5000	0.5000	9(2)	0.250
Si(1)	1	$8l$	0.1168(1)	0.2895(2)	0.2196(2)	8(1)	1.000
			0.1168(1)	0.2891(3)	0.2200(3)	7(1)	1.000
			0.1170(1)	0.2892(4)	0.2198(3)	8(1)	1.000
Si(2)	m	$4j$	0.1838(1)	0.5410(3)	0.5000	6(1)	0.500
			0.1836(1)	0.5427(5)	0.5000	6(2)	0.500
			0.1837(1)	0.5417(6)	0.5000	8(2)	0.500
Si(3)	m	$4j$	0.1023(1)	0.9309(3)	0.5000	7(1)	0.500
			0.1022(1)	0.9303(5)	0.5000	6(2)	0.500
			0.1024(1)	0.9306(6)	0.5000	6(2)	0.500
O(1)	1	$8l$	0.0590(1)	0.4074(5)	0.2476(5)	16(2)	1.000
			0.0592(2)	0.4076(8)	0.2476(8)	13(3)	1.000
			0.0593(2)	0.4084(9)	0.2500(9)	16(3)	1.000
O(2)	1	$8l$	0.1717(1)	0.4089(6)	0.3130(5)	16(2)	1.000
			0.1718(2)	0.4077(8)	0.3114(7)	16(3)	1.000
			0.1722(2)	0.4077(9)	0.3111(8)	15(3)	1.000
O(3)	1	$8l$	0.1167(2)	0.0627(5)	0.3131(5)	24(2)	1.000
			0.1164(3)	0.0629(7)	0.3144(7)	26(3)	1.000
			0.1165(3)	0.0616(8)	0.3120(8)	24(4)	1.000
O(4)	m	$4i$	0.1351(2)	0.2550(8)	0.0000	10(3)	0.500
			0.1345(3)	0.2573(13)	0.0000	7(4)	0.500
			0.1351(3)	0.2555(14)	0.0000	11(5)	0.500
O(5)	m	$4j$	0.1458(2)	0.7427(10)	0.5000	21(3)	0.500
			0.1465(4)	0.7418(15)	0.5000	14(5)	0.500
			0.1460(4)	0.7394(15)	0.5000	17(5)	0.500
O(6)	m	$4j$	0.0378(2)	0.8527(10)	0.5000	29(4)	0.500
			0.0378(4)	0.8543(15)	0.5000	23(6)	0.500
			0.0375(4)	0.8583(16)	0.5000	24(7)	0.500
O(7)	$mm2$	$2f$	0.2500	0.6076(12)	0.5000	14(5)	0.250
			0.2500	0.6081(17)	0.5000	7(6)	0.250
			0.2500	0.6049(19)	0.5000	13(7)	0.250

Table 3. (Continuation).

Atom	Site symmetry	Wyckoff position	x	y	z	$U_{eq} \cdot 10^3$ [Å^2]	s.o.f.
O(W8)	m	4i	0.0381(4)	0.8379(13)	0.0000	92(9)	0.546(6)
			0.0390(6)	0.8399(21)	0.0000	88(13)	0.552(11)
			0.0379(6)	0.8315(19)	0.0000	99(12)	0.500
O(W9)	m	4i	0.3308(4)	0.7780(13)	0.0000	75(7)	0.451(5)
			0.3312(5)	0.7801(20)	0.0000	64(10)	0.517(10)
			0.3317(6)	0.7792(21)	0.0000	74(11)	0.500
O(W10)	m	4k	0.2500	0.0211(24)	0.1901(29)	80(13)	0.236(5)
			0.2500	0.0247(28)	0.1895(36)	65(17)	0.278(9)
			0.2500	0.0204(39)	0.1874(49)	102(21)	0.250
O(W11)	$mm2$	2f	0.2500	0.052(14)	0.5000	90	0.055(8)

During the course of the independent refinements of **Z** and **SV** and also of **TC** it became evident, that only K and Ca were present as non-tetrahedral cations but no Na, as expected from the chemical composition reported in the literature. Therefore, electron microprobe analyses were carried out on a CAMEBAX Microbeam run at 15 kV and 15 mA with carefully selected crystals of rhodesites **Z** and **TC** as well as with rhodesite from Kimberley, South Africa (**K**). Results of the analyses are listed in Table 7.

3. Description of the structure

The structure consists of silicate double layers, chains of edge-sharing $[Ca(O, OH_2)_6]$ octahedra, and potassium cations and additional water molecules within pores of the silicate double layers (Figs. 1 and 2).

Silicate anions

Each silicon atom is tetrahedrally coordinated by four oxygen atoms. Three out of four $[SiO_4]$ tetrahedra share three corners (ternary tetrahedra), the fourth shares all four corners (quaternary tetrahedron) with adjacent $[SiO_4]$ tetrahedra (Fig. 1 a).

The values found for bond lengths and angles (Table 4)[1] are well within the ranges observed in other accurately determined silicate structures. The distances $d(Si-O)$ vary between 1.571 and 1.643 Å/1.568 and 1.638 Å/1.569 and 1.641 Å, with $d(Si-O^t)$ between silicon and terminal (non-bridging) oxygen atoms being on average shorter (1.583/1.580/1.584 Å) than $d(Si-O^{br})$ to bridging oxygen atoms (1.612/1.613/1.616 Å); the grand mean values for the three rhodesites are 1.608/1.608/1.611 Å.

Table 6. Valence bond analyses of rhodesite from Zeilberg (first lines), Trinity County (second lines), and San Venanzo (third lines).
↓: this value has to be counted twice or four-times respectively for Σ (cation),
→: this value has to be counted twice for Σ (oxygen).

Atom	Si(1)	Si(2)	Si(3)	Ca(1)	Ca(2)	K	Σ(ox)	Species
O(1)	1.15			0.41 × 4↓	0.37 × 4↓		1.93	O^{2-}
	1.16			0.39 × 4↓	0.37 × 4↓		1.92	O^{2-}
	1.14			0.38 × 4↓	0.38 × 4↓		1.90	O^{2-}
O(2)	0.95	1.06 × 2↓				0.13 × 4↓	2.14	O^{2-}
	0.96	1.01 × 2↓				0.14 × 4↓	2.11	O^{2-}
	0.96	1.01 × 2↓				0.14 × 4↓	2.11	O^{2-}
O(3)	0.99		1.04 × 2↓				2.03	O^{2-}
	1.00		1.05 × 2↓				2.05	O^{2-}
	0.99		1.02 × 2↓				2.01	O^{2-}
O(4)	1.01 × 2→					0.11 × 2↓	2.13	O^{2-}
	1.01 × 2→					0.10 × 2↓	2.12	O^{2-}
	1.00 × 2→					0.10 × 2↓	2.10	O^{2-}
O(5)		1.06	1.07				2.13	O^{2-}
		1.16	1.03				2.19	O^{2-}
		1.16	1.02				2.18	O^{2-}
O(6)			1.08		0.25 × 2↓		1.33	OHO
			1.10		0.25 × 2↓		1.35	OHO
			1.09		0.23 × 2↓		1.32	OHO
O(7)		1.04 × 2→					2.08	O^{2-}
		1.03 × 2→					2.06	O^{2-}
		1.05 × 2→					2.10	O^{2-}
O(W8)				0.32 × 2↓			0.32	H_2O
				0.30 × 2↓			0.30	H_2O
				0.36 × 2↓			0.36	H_2O
O(W9)						0.13 × 2↓	0.13	H_2O
						0.13 × 2↓	0.13	H_2O
						0.13 × 2↓	0.13	H_2O
O(W10)						0.08 × 2↓	0.08	H_2O
						0.08 × 2↓	0.08	H_2O
						0.07 × 2↓	0.07	H_2O
Σ(cat)	4.10	4.22	4.23	2.28	1.98	1.16		
	4.13	4.21	4.23	2.16	1.98	1.18		
	4.09	4.23	4.15	2.24	1.98	1.16		

According to the crystal chemical classification of silicates (Liebau, 1985, pp. 76–84), the silicate anion of rhodesite can be constructed by:

(i) linking four tetrahedra to a four-membered ring;

(ii) linking such rings to form a loop-branched dreier single chain, the rings being the loops of the chain. Such chains run parallel to [010] as well as to [001] (Fig. 2b). The former ones are chosen as fundamental chains because $b_o < c_o$.

Table 7. Electron microprobe analyses of four rhodesite samples from three localities.

	Experimental [wt-%]				Theoretical [wt-%]	
	I	II	III	IV	V	VI
SiO_2	65.74	63.93	65.41	66.27	63.50	61.70
CaO	15.44	13.58	15.53	15.21	14.81	14.40
K_2O	2.25	6.90	2.27	2.23	6.22	6.05
Na_2O	0.33	0.00	0.17	0.33	0.00	3.98
Sum	83.76	84.41	83.38	84.04	84.53	86.13
H_2O					15.47	13.87

I, II: Rhodesite from Zeilberg, Unterfranken, Germany,
III: Rhodesite from Trinity County, California, USA,
IV: Rhodesite from Kimberley, South Africa,
V: Calculated for $HKCa_2Si_8O_{19} \cdot 5H_2O$,
VI: Calculated for $NaKCa_2Si_8O_{19} \cdot 5H_2O$.

(iii) An infinite number of these chains are linked to form a loop-branched dreier single layer parallel to (100) (Fig. 2b); linking the chains produces larger eight-membered rings.

The terminal oxygen atom of one tetrahedron in every vierer ring lies on one side of the layer; its directedness (Liebau, 1985) may arbitrarily be chosen as $\mathfrak{D}$ (down). The terminal oxygen atoms of the other three tetrahedra of each vierer ring lie on the other side of the layer, their directedness then being $\mathfrak{U}$ (up). The sequence of directedness within each vierer ring is $\mathfrak{UUUD}$.

(iv) Each two single layers are linked via their tetrahedra of directedness $\mathfrak{D}$ to form a loop-branched dreier double layer which has a mirror plane parallel to (100) between the two single layers (Fig. 1a, b). Linking two single layers produces another set of eight-membered rings between the layers.

Octahedron chains

There are two sets of octahedrally coordinated calcium ions, their octahedra having $2/m$ symmetry. While Ca(2) is coordinated by six terminal oxygen atoms which belong to six different $[SiO_4]$ tetrahedra, Ca(1) is coordinated by four terminal oxygen atoms from four $[SiO_4]$ and by two oxygen atoms that are part of water molecules W(8) (Fig. 1a). Bond lengths $d(Ca-O)$ vary between 2.307 and 2.476 Å/2.312 and 2.485 Å/2.326 and 2.508 Å (Table 5[1]).

The octahedra share edges thus forming single chains parallel to [001] (Figs. 1a, b, 2a). The octahedron chains connect adjacent silicate double layers.

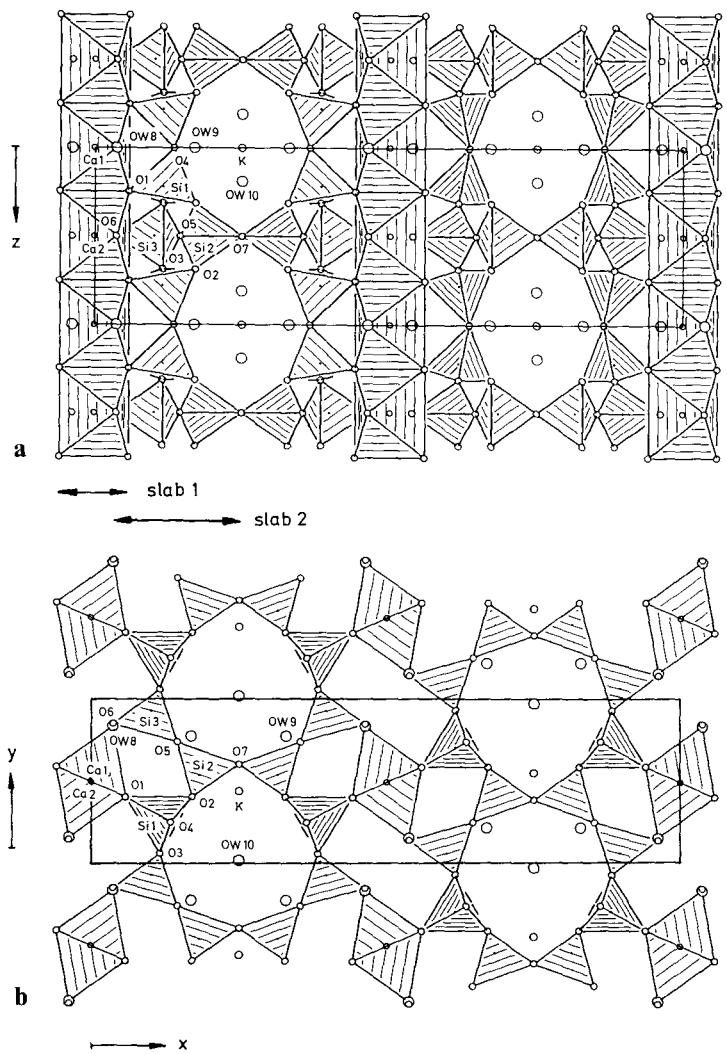

Fig. 1. The crystal structure of rhodesite a) projected along [010], b) projected along [001]. Slabs 1 and 2, as shown in Fig. 2, are indicated. In Figures 1 and 2 the circles represent, in the order of increasing diameter, Si, Ca, O of the silicate layers, K, and O of water molecules.

Each water molecule W(8) is coordinated by six O^t and three O^{br} of two adjacent silicate double layers plus two water molecules and one Ca(1) ion (Fig. 4a, Table 5).

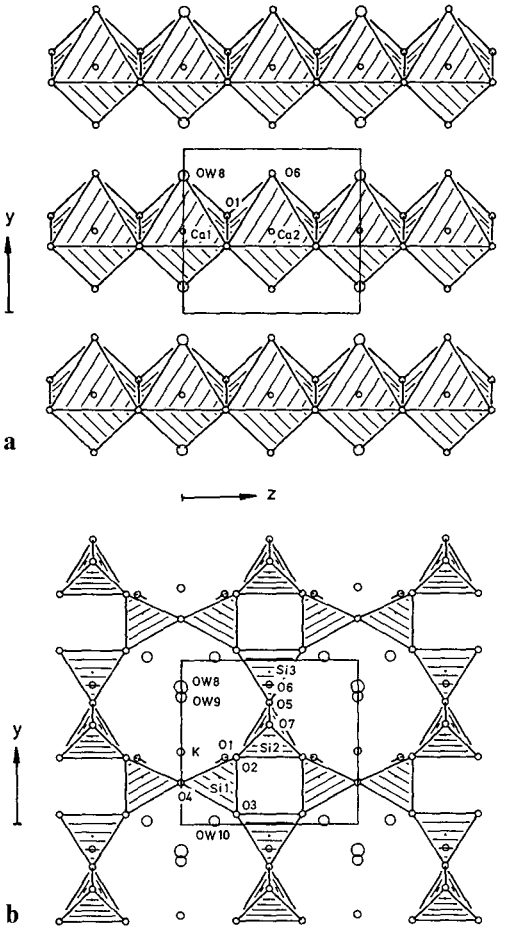

Fig. 2. Two slabs of the crystal structure of rhodesite projected along [100] a) Slab 1 ($-0.060 \leq x \leq 0.060$): chains of edge-sharing octahedra; b) Slab 2 ($0.037 \leq x \leq 0.250$): one sublayer of the dreier double layer.

Pore-filling species

From Fig. 1 it is evident that there are two systems of channel-like pores, one running parallel to [010], the other running parallel to [001] through the structure, midway between the two sublayers that form a double layer. These pores are wide enough to house the potassium ions and the water molecules W(9) and W(10) and also, in **SV**, W(11).

Each potassium ion is surrounded by six bridging oxygen atoms O^{br} and four water molecules W(9) and W(10) which are not coordinating the calcium ions. These water molecules form a distorted tetrahedron around

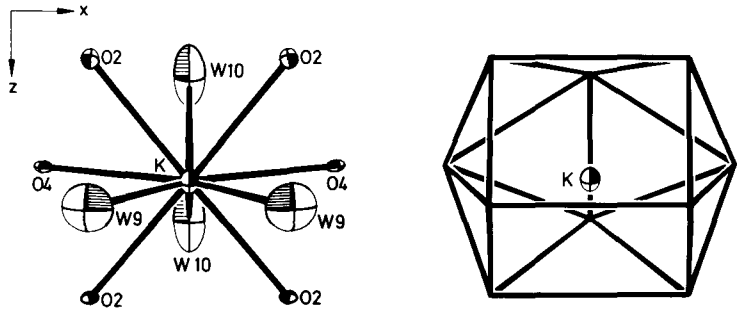

Fig. 3. Coordination polyhedron $[KO_6^{br}(OH_2)_4]$ around potassium in rhodesite, as seen approximately along [010]. Thermal ellipsoids are scaled to 20% probability.

K^+. The distances $d(K-O)$ and $d(K-W)$ vary between 2.88 and 3.08 Å/2.87 and 3.07 Å/2.87 and 3.11 Å (Table 5[1]). These values differ not much from the sum 2.97 Å of the ionic radii of ten-coordinated K^+ (1.59 Å) plus four-coordinated oxygen (1.38 Å) (Shannon, Prewitt 1976). The coordination polyhedron $[KO_6^{br}(OH_2)_4]$ around K^+ is shown in Figure 3.

Disregarding the hydrogen atoms, each oxygen atom of water molecule W(9) is quite regularly surrounded by eight bridging oxygen atoms O^{br} of the silicate layers, three water oxygen atoms and one potassium ion with all distances in the ranges between 2.813 and 3.575 Å/2.825 and 3.575 Å/2.813 and 3.580 Å with an average of 3.195 Å/3.197 Å/3.192 Å (Table 5, Fig. 4b).

The coordination around W(10) is somewhat less regular: distances to seven bridging oxygen atoms, three water oxygen atoms and one potassium ion scatter well in the ranges between 2.680 and 3.481 Å/2.674 and 3.500 Å/2.648 and 3.507 Å with averages of 3.148 Å/3.149 Å/3.150 Å (Table 5, Fig. 4c).

These descriptions of the surroundings of K^+, W(9) and W(10) do not imply that these pore filling species have well defined first coordination spheres. On the contrary, the count of ligands has rather arbitrarily been terminated.

During **SV** refinement the difference synthesis showed a weak but neatly defined residual peak at 1/4, 0, 1/2 which was assumed to be partially occupied by a water oxygen O(W11). In the subsequent least-squares refinement the occupancy of this site was varied, while a fixed isotropic thermal parameter $B = 7.0$ Å^2 was assumed. The final site occupation factor s.o.f. of 0.055 (Table 3) corresponds to an occupancy of ca. 1/4.

The distances between O(W11) and its surrounding atoms, as listed in Table 5[1], in particular the short distances 2.22(4) Å to two O(W10) atoms, clearly indicate that O(W11) is not occupied when one of the two adjacent O(W10) sites is occupied. As the occupancy of each O(W10) site is 0.5 (0.472 for **Z** and 0.556 for **TC**), the probability that both adjacent sites are

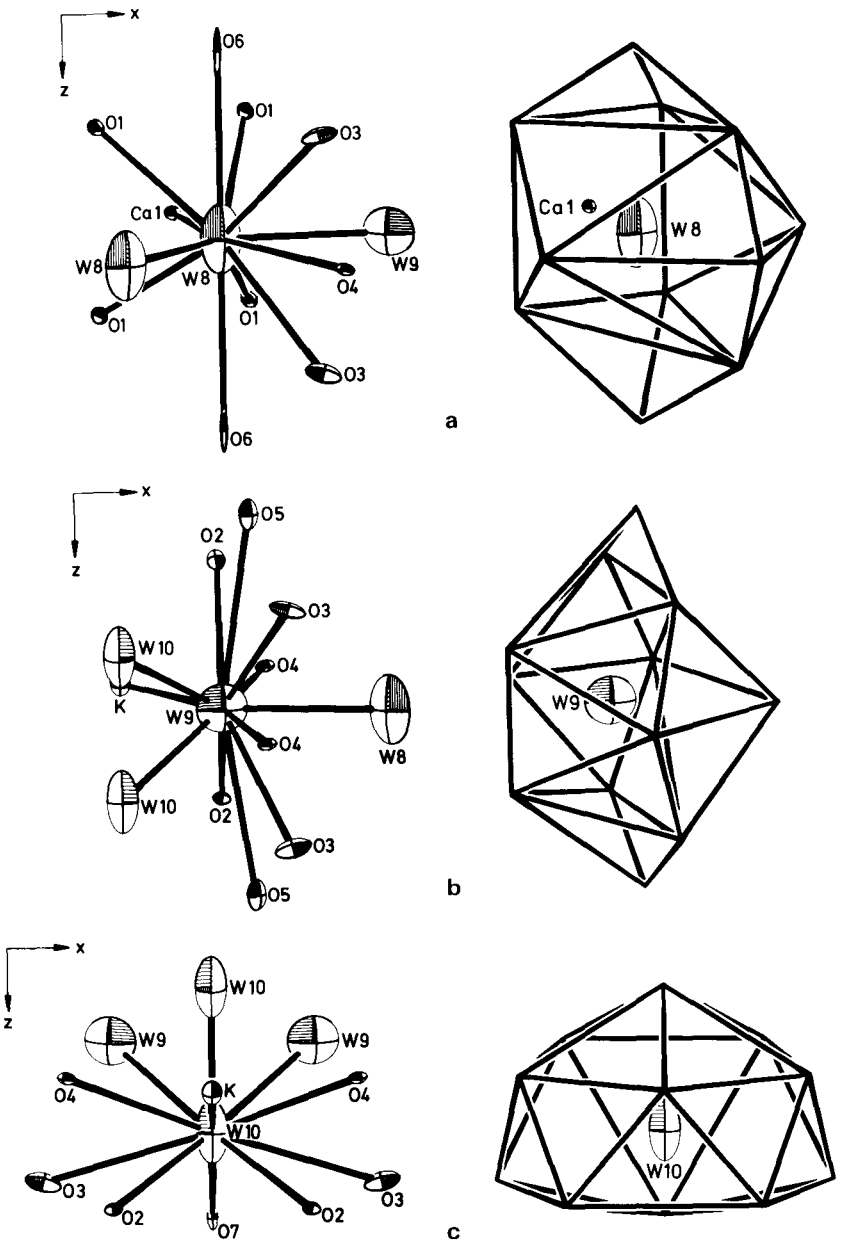

Fig. 4. Coordination around the oxygen atoms of the water molecules as seen approximately along [010]. Thermal ellipsoids are scaled to 20% probability. a) [W(8) $CaW_2O_3^{br}O_6^t$], b) [W(9)$KW_3O_8^{br}$], c) [W(10)$KW_3O_7^{br}$], d) [W(11)O_{11}^{br}]. W(11) and W(10) cannot both be occupied.

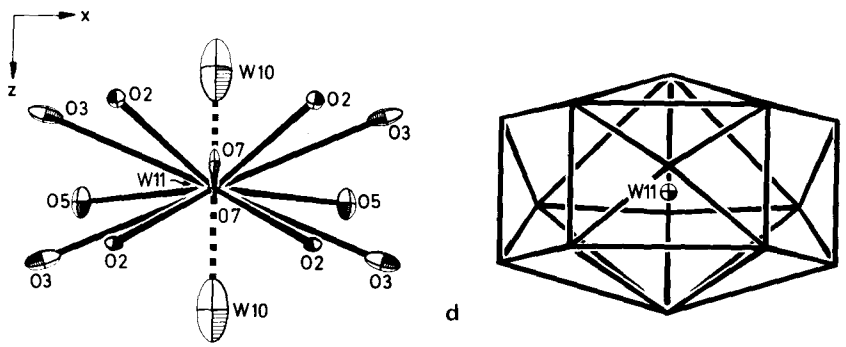

Fig. 4.

not occupied is 0.25, which is just the occupancy obtained for the O(W11) site. The coordination around O(W11) is shown in Fig. 4d.

In refinements of **Z** and **TC** no partial occupation of a site corresponding to O(W11) in **SV** has been observed.

Hydrogen atoms

The quality of the intensity data sets used for the structure refinements was not good enough to lead to reliable positions of the hydrogen atoms. Therefore, only indirect conclusions drawn about the bonding scheme of the hydrogen atoms in rhodesite are given here.

Valence balance summations were computed following Brown and Altermatt (1985) and are presented in Table 6. They clearly show that O(W8), O(W9) and O(W10) have to be considered as oxygen atoms of water molecules. The values 1.33/1.35/1.32 obtained for the valence sums of the terminal oxygen atom O6 indicate that hydrogen is bonded to this oxygen atom.

Summing up the non-hydrogen atoms derived in the structure analysis, full occupation of each Wyckoff position assumed, the unit cell contains $K_2Ca_4Si_{16}O_{38}(H_2O)_{12}$. The charge deficit is balanced by two H atoms which are obviously bridging pairwise between the four terminal O6 atoms. This is in reasonable agreement with the value 1.33 of the sum of the bond strengths reaching O6, which is nearer to 1.5 than to the value 1.0 expected if each O6 would bind a full hydrogen atom. It is also in agreement with the short distances d(O6 ... O6) = 2.62/2.61/2.56 Å which suggest a rather strong hydrogen bond between the O6 atoms of adjacent silicate double layers and octahedron chains.

Although in space group *Pmam* the O6 atoms of adjacent $[Si_{16}O_{38}]$ double layers are related by a centre of symmetry, the hydrogen atom of

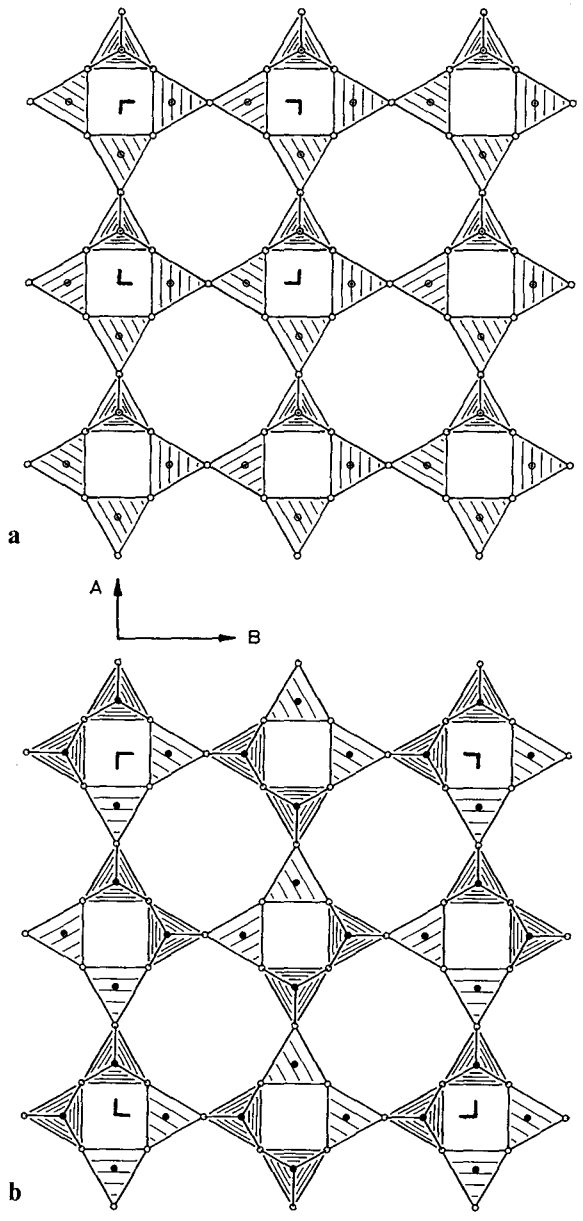

Fig. 5. Topology of one sublayer each of the double layers of a) silicates of the rhodesite family, b) carletonite. Full circles represent Si and O, open circles O.

the Si–O ... H ... O–Si bond probably occupies two positions off the $\bar{1}$ statistically.

Relatively short distances between water oxygen atoms – O(W10) ... O(W10) 2.68/2.67/2.65 Å; O(W8) ... O(W8) 2.78/2.78/2.83 Å; O(W9) ... O(W10) 2.81/2.83/2.81 Å (2×); O(W8) ... O(W9) 3.10/3.07/3.08 Å – probably indicate hydrogen bonds between the water molecules. All distances between water oxygen atoms O(W8) to O(W10) and oxygen atoms bonded to silicon are longer than 3.10 Å.

4. Chemical composition and structural formula

The structure refinement of the three rhodesites **Z**, **TC** and **SV** clearly show that there is no specific cation position that is fully or to a large extent occupied by sodium. In addition, the site occupation factors listed in Table 3 for the atoms in sites called K, Ca(1) and Ca(2) indicate that no substantial replacement of potassium and calcium by sodium takes place. This is in disagreement with the chemical composition reported in the literature for rhodesite from Kimberley (**K**) (Gard, Taylor, 1957) and for rhodesite **TC** (Sheppard, Gude, 1969) but in reasonable agreement with the results of the microprobe analyses listed in Table 7.

Since **TC** has been discovered in a magadiite deposit, impurities of this sodium silicate, $NaSi_7O_{13}(OH)_3 \cdot 3H_2O$, may explain the small sodium content found in the analyses by Sheppard and Gude (1969) and during these studies by Ackermand (Table 7, column III). At present the rather high Na content of rhodesite from Kimberley cannot be explained on similar lines because very little is known about its formation and coexisting minerals.

However, there is some peculiarity in our results of the potassium content. While all three structure refinements indicate that there are two potassium cations in the unit cell (Table 3), all but one of the five microprobe analyses (Table 7) suggest less than one K^+ per cell. The only analysis (column II of Table 7) with a K^+ content near the value 2 obtained from the structure refinements is the analysis in which no Na^+ has been found. A likely explanation for these observations is given in the discussion at the end of this paper.

Defining as "ideal composition" of rhodesite that composition for which the sum of H_2O molecules W(10) and W(11) per unit cell is 4 and in which all other sites are fully occupied, then we can conclude from the structure refinements that the ideal composition of rhodesite is $HKCa_2Si_8O_{19} \cdot 6\,H_2O$, whereas the actual compositions of rhodesites are $HKCa_2Si_8O_{19} \cdot (6-x)H_2O$ with $x \simeq 1$ for **Z** and **TC** and $x \simeq 0.75$ for **SV**.

Following the notation recommended by the *International Union of Crystallography* (IUCr) for crystal-chemical formulae of inorganic sub-

stances (Lima-de-Faria, Hellner, Liebau, Makovicky, Parthé, 1990), a detailed formula of rhodesite is

$$H^{[2]}K^{[,6,4;]}Ca^{[,(4,2)o;]}Ca^{[,6o,-;]}\{\boldsymbol{IB},3,2^2_\infty\}[Si_6^{[4t]\Gamma 1;3\rfloor}Si_2^{[4t]\Gamma 1;4\rfloor}O_{19}] \cdot (6-x)H_2O,$$

where the data of the right-handed superscripts to K and Ca indicate that each potassium ion is coordinated by six oxygen atoms and four water molecules, one set of calcium ions by four oxygen atoms and two H_2O forming an octahedron, the other calcium by an octahedron of six oxygen atoms, and where the data within the curly brackets indicate that the structural unit $[Si_8O_{19}]$ is a loop-branched dreier double layer, and the right-handed superscripts to the Si reveal that out of the eight tetrahedrally coordinated silicon atoms, which all have the linkedness $\boldsymbol{L} = 1$ (corner-sharing), six share corners with three others each and two with four others each. A simplified crystal-chemical formula would be

$$H^{[2]}\,K^{[10]}\,Ca_2^{[6]}\,\{\boldsymbol{IB},3,2^2_\infty\}\,[Si_8O_{19}] \cdot (6-x)\,H_2O.$$

5. Comparison with other silicates

Our structure refinements confirm the suggestions made by Cannillo, Rossi and Ungaretti (1968), Ragimov et al. (1980), and Ghose, Sen Gupta and Campana (1987) that the structure of rhodesite is closely related to those of delhayelite, hydrodelhayelite, macdonaldite and monteregianite. The lattice constants and some other structural details of these silicates are listed in Table 8. For better comparison the structures are described with regard to a common subcell with $A_0 \simeq 6.5$ Å, $B_0 \simeq 7.0$ Å, C_0 containing one double layer and $A = B = \Gamma = 90°$.

1. The silicate anion

In fact, rhodesite, delhayelite, hydrodelhayelite, macdonaldite and monteregianite all have double layers $[(Si, Al)_8O_{19}]$ of the same topology. The two sublayers are linked via one out of the four tetrahedra of each vierer ring.

The maximum topological symmetry of such a double layer is $\boldsymbol{P2mm}$[2] with regard to the lattice translations **A**, **B**, **C** chosen in Table 8.

In rhodesite and delhayelite the double layers have this maximum topological symmetry. Adjacent double layers can be transformed into another

[2] Symbols of symmetry elements related to the cell **A**, **B**, **C** are set in bold face type.

Table 8. Comparison of lattice dimensions and space group symmetries of the double-layer silicates of the rhodesite family.

	Cell dimensions				n_T	SG(**a**, **b**, **c**)	SG(**A**, **B**, **C**)	Reference
Common subcell	6.5 (A_0)	7.0 (B_0)	12.0 (C_0)	90 (Γ)	8	–	**P2mm**	–
Rhodesite	6.555(b_0)	7.050 (c_0)	23.416 (a_0)	90	16	*Pmam*	**Pcmm**	Hesse (1987)
Delhayelite	6.53 (c_0)	7.07 (b_0)	24.86 (a_0)	90	16	*Pmmn*	**Pnmm**	Cannillo et al. (1970)
Monteregianite	9.512 (a_0)	9.617(c_0)	23.956 (b_0)	93.85 (β)	32	$P2_1/n$		Ghose et al. (1987)
	13.064 ($I_{[101]}$)	13.973 ($I_{[\bar{1}01]}$)	23.956 (b_0)	90.62	64		**$C112_1/a$**	
Macdonaldite	13.109 (b_0)	14.081 (a_0)	23.560 (c_0)	90	64	*Cmcm*	**Ccmm**	Cannillo et al. (1968)
Hydrodelhayelite	6.646 (a_0)	7.073 (c_0)	23.846 (b_0)	90	16	$Pn2_1m$	**$Pnm2_1$**	Ragimov et al. (1980)
Carletonite	13.178 (b_0)	13.178 (a_0)	16.695 (c_0)	90	32	*P4/mbm*	**P4/mbm**	Chao (1972)

a_0, b_0, c_0, β: reported cell parameters (in Å and degree) based on conventional space groups.
n_T: number of [(Si, Al)O_4] tetrahedra per unit cell.
SG(**a**, **b**, **c**): space group refered to the measured unit cell.
SG(**A**, **B**, **C**): space group refered to the common subcell.

by a ***c*** glide plane perpendicular to **A** in rhodesite and by a ***n*** glide plane perpendicular to **A** in delhayelite. This results in an $A_0 \times B_0 \times 2C_0$ cell for these two silicates.

In macdonaldite the symmetry of the double layer is reduced: every second mirror plane ***m*** perpendicular to **B** and every second diad parallel to **A** are lost. Adjacent double layers can be transformed into another by a ***c*** glide plane perpendicular to **A** as in rhodesite. Consequently, the unit cell dimensions of macdonaldite are $2A_0 \times 2B_0 \times 2C_0$.

In hydrodelhayelite the symmetry of the double layer is reduced to ***P*11*m***, according to the structure determination of Ragimov et al. (1980). Adjacent double layers can be transformed into another by ***n*** glide planes perpendicular to **A**.

In monteregianite the double layers have lost all their symmetry and, in addition, the lengths of translation vectors of the double layer increase to $\sqrt{2}\ A_0$ and $\sqrt{2}\ B_0$. There are two double layers per unit cell with an ***a*** glide plane between them.

The structure of carletonite, $KNa_4Ca_4[Si_8O_{18}]\ [CO_3]_4\ (OH,F) \cdot (H_2O)_{1+x}$, (Chao, 1972) contains silicate double layers the sublayers of which can also be generated by linking vierer rings. In contrast to the vierer rings in the $[(Si,Al)_8O_{19}]$ double layers discussed so far which have the sequence of directedness **𝔘𝔘𝔘𝔇**, the corresponding vierer rings in carletonite are of the type **𝔘𝔘𝔇𝔇** (Fig. 5). As a consequence, two such sublayers are linked via two out of the four tetrahedra of each vierer ring to form a double layer which has the composition $[Si_8O_{18}]$. The structural similarity between carletonite and the four double-layer silicates of the rhodesite family is reflected in their lattice constants (Table 8).

2. Cations and water molecules

Since structural differences between the tetrahedral double layers of the silicates of the rhodesite family are relatively small, these as well as the different ways of stacking the double layers are probably mainly due to the different cations present in the structures and to a lesser extent to formation temperatures and pressures of the silicate minerals. It is, therefore, worthwhile to compare the arrangements and coordinations of the cations in these silicates. This has been done in short form in Table 9[1] in which the cations and their polyhedra per $[(Si,Al)_{16}O_{38}]$ are listed.

2.1. Octahedrally coordinated cations A *and* B *(CN = 6)*

There are two sets of octahedra, oct(1) and oct(2), which are occupied by the medium sized cations Ca^{2+} in rhodesite, delhayelite, hydrodelhayelite, and macdonaldite, and by Y^{3+} and Na^+ in monteregianite. While in

rhodesite, macdonaldite and monteregianite the M(oct1) cations are coordinated by four terminal oxygen atoms from two silicate double layers plus two water molecules and the M(oct2) by six terminal oxygen atoms, in delhayelite and hydrodelhayelite, all these octahedral cations are instead coordinated by five terminal oxygen atoms and one fluoride ion (delhayelite) or one water molecule (hydrodelhayelite).

Calcium and sodium ions which have Shannon and Prewitt (1976) radii $r^{[6]}$ of 1.00 Å and 1.02 Å respectively, have just the right size to form straight chains of edge-shared octahedra (Fig. 2a) which stretch parallel to the loop-branched dreier chains of the tetrahedral double layers. It are these cations which are responsible for the formation of the dreier chains, here as well as in so many other chain and layer silicates of calcium. Slightly smaller cations such as Y^{3+} ($r^{[6]} = 0.90$ Å) can still, in combination with Na^+, adjust to the dreier chains of double layers as can be seen in monteregianite.

2.2. Chain-linking cations C *(CN ≃ 8)*

In monteregianite and delhayelite which have been described to occur associated with sodium silicates such as albite, nepheline and sodalite (Chao, Harris, Hounslow, Mandarino, Perrault, 1967) and with nepheline, götzenite and combeite (Sahama, Hytönen, 1959) respectively, and which may, therefore, be assumed to have formed in the presence of considerable concentrations of sodium ions, voids between the octahedron chains are occupied by Na^+ ions – Na(1) in monteregianite and (Na_3Ca) in delhayelite (Fig. 6b, c, Table 9[1]). These cations are eight-fold coordinated by four terminal and two bridging oxygen atoms and by an additional two water molecules (in monteregianite) or fluoride ions (in delhayelite). They link the octahedron chains to form a layer of face-sharing polyhedra.

While in delhayelite all cation sites between the octahedron chains are occupied by Na^+ and Ca^{2+} leading to dense layers, (Fig. 6c) only 50 percent of the inter-chain positions are occupied by cations in monteregianite producing perforated layers (Fig. 6b). This is analogous to the existence of the two types of octahedron layers in the well known trioctahedral and dioctahedral micas and clay minerals.

In macdonaldite which has been found to occur in veins within an apparently almost alkali-free sanbornite-quartz rock (Alfors, Stinson, Matthews, Pabst, 1965) and in hydrodelhayelite (Ragimov et al., 1980) the corresponding voids between the octahedron chains are empty (Fig. 6a). According to our structure refinements these inter-chain sites are also unoccupied in clear transparent crystals of rhodesite, for which the experimental site occupation factors (Table 3) led to the composition $HKCa_2[Si_8O_{19}] \cdot (6-x)H_2O$, $x \simeq 1$.

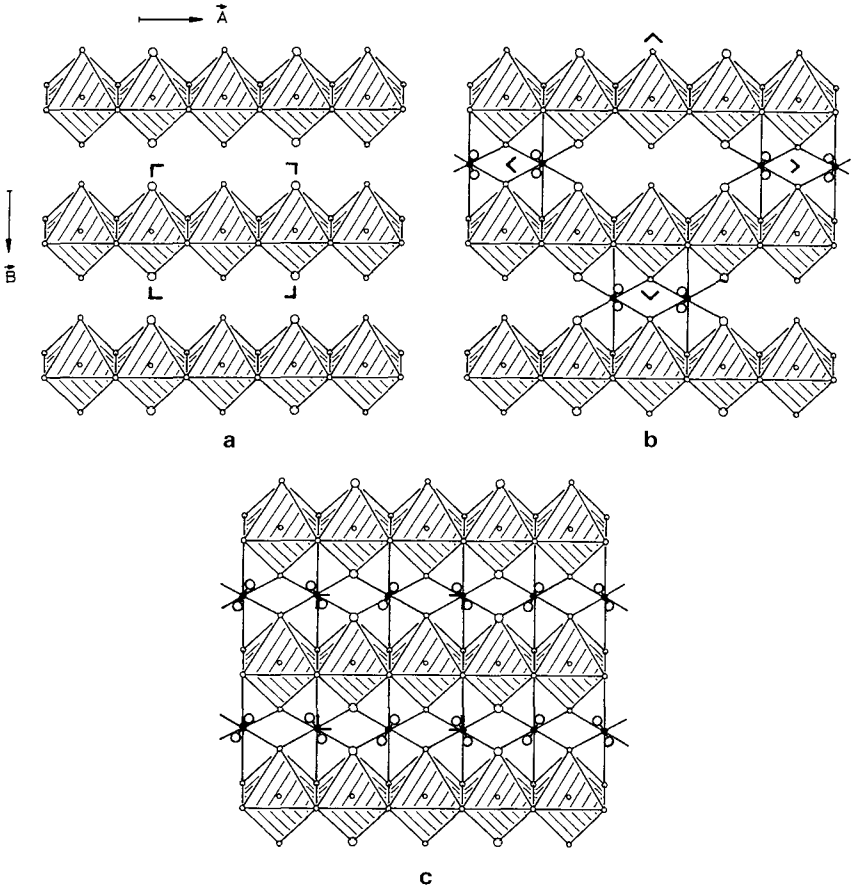

Fig. 6. Idealized diagrams of the slabs 1 of Figs. 1 and 2 containing the A-, B- and C-site cations in silicates of the rhodesite family: a) rhodesite, hydrodelhayelite and macdonaldite, b) monteregianite, c) delhayelite. Open circles represent, in the order of increasing diameter, Ca, O of the silicate layers, and O of water molecules. Full circles represent chain-linking cations.

2.3. Pore-filling species D, E, F, *and* G *(CN ≥ 8)*

Due to the considerably covalent character of the Si – O bond the structure of the tetrahedral double layers is rather rigid allowing only minor changes of the shape and diameters of the channel-like pores. To stabilize these open structures the pores have to be filled with atoms that add bond energy to the bond energy of the main structure (double layers plus octahedron chains plus chain-linking cations). From Table 9[1] it can be seen that the

pore-filling species can be cations, anions or/and water molecules. Only those species are suitable as fillers which have a low electrostatic field strength, i.e. K^+, Ba^{2+}, H_2O, F^- and Cl^-, and probably Rb^+, Cs^+, Sr^{2+}, Br^- and I^-. Such *soft ions* "have no pronounced preference for one or other kind of well defined coordination polyhedron, but instead accept any site offered by the silicate anions" (Liebau, 1985, pp. 187–195). They induce only slight rotations of the $[SiO_4]$ tetrahedra for adjustment and, therefore, cause only minor variations of the pores in the different members of the rhodesite family. As a consequence, the various pore-filling species, independent of their charge, can be associated with different reasonably well-defined sites. They are surrounded by ten or more neighbouring atoms, with the exception of $K(2)^+$ in delhayelite which is coordinated by only eight ligands: six bridging oxygen atoms and two large chloride ions. Whether a cation, an anion or a water molecule is incorporated depends on charge-balance requirements and availability.

With regard to the pore-filling species the double-layer silicates of the rhodesite family are very similar to the zeolite framework silicates.

6. Discussion

From the comparison of coordination polyhedra (Table 9 [1]) the following general formula of double-layer silicates of the rhodesite family can be deduced:

$$H^{[2]}_{4-v}\,A^{[6]}_{2}\,B^{[6]}_{2}\,C^{[\simeq 8]}_{0\ldots 4}\,D^{[\simeq 10]}_{2-w}\,\{2^{2}_{\infty}\}\,[T^{[4]}_{8}O_{19}]_2\,E^{[\gtrsim 10]}_{4-x}\,F^{[\gtrsim 10]}_{4-y}\,G^{[\gtrsim 10]}_{4-z}$$

with A and B: octahedrally coordinated mono-, di- and trivalent cations with $0.90\ \text{Å} \lesssim r^{[6]} \lesssim 1.05\ \text{Å}$ such as Na^+, Ca^{2+}, Y^{3+} and probably Cd^{2+}, Yb^{2+}, La^{3+}, RE^{3+};

C: eight-fold coordinated mono- and divalent cations with $r^{[8]} \simeq 1.2\ \text{Å}$ such as Na^+, Ca^{2+} and probably Sr^{2+}, Sn^{2+}, Eu^{2+}, Pb^{2+};

E: "soft" mono- and divalent cations with $r^{[10]} \gtrsim 1.5\ \text{Å}$ such as K^+, Ba^{2+} and probably Rb^+, Cs^+;

D, F and G: "soft" monovalent cations with $r^{[10]} \gtrsim 1.5\ \text{Å}$ such as K^+ and perhaps Rb^+, Cs^+,
or monatomic anions of similar size such as F^- and Cl^-,
or water molecules.

The sites for the species D to F and in particular G have a considerable tendency for partial occupation, allowing small amounts of additional pore-filling species such as W(11) in rhodesite **SV** to enter voids of the structure.

Although in the structure refinements it has been found that the four chain-linking C-sites per unit cell are either all occupied (delhayelite) or all empty (rhodesite, macdonaldite and hydrodelhayelite) or two of these sites

are fully occupied the other two unoccupied (monteregianite) this does not necessarily have to be so. This variability of the occupation of the C sites rather suggests that partial site occupation is possible for those C sites which are empty in ideal stoichiometric crystals, i.e. in rhodesite, macdonaldite and perhaps hydrodelhayelite.

In the case of rhodesite this would mean that in the presence of high concentrations of sodium ions, C sites could be partially occupied by Na^+. The necessary charge compensation could be achieved either by $Ca^{2+} \rightleftharpoons Na^+$ or $Si^{4+} \rightleftharpoons Al^{3+}$ replacement or by loss of an equivalent number of K^+ ions with or without replacement by H_2O molecules. The results of the microprobe analyses (Table 7) are in favour of a replacement $Ca^{2+} \rightleftharpoons Na^+$ and, in addition, a coupled replacement

$$\square(C) + K^+(E) \rightleftharpoons Na^+(C) + (\text{possibly})\ H_2O(E).$$

This would mean that ideal stoichiometric rhodesite is the sodium-free endmember $HKCa_2[Si_8O_{19}] \cdot 6H_2O$ of the solid solutions $HK_{1-x}Na_{x+2y}Ca_{2-y}[Si_8O_{19}] \cdot (6-z)H_2O$.

That in our rhodesite structure refinements site occupation factors were obtained which exclude the presence of substantial amounts of sodium may be explained by the assumption that the carefully selected transparent crystals used for the X-ray studies have formed under optimum temperature/pressure conditions for the crystallization of sodium-free stoichiometric rhodesite, and that less ordered sodium containing rhodesite crystals that formed at later stages of the crystallization process (lower temperature, sodium enrichment of the solution) or which are formed by transformation of stoichiometric rhodesite under attack of sodium-rich solutions are of lower quality and would, therefore, have been disregarded for X-ray data collection.

From the crystallographic results presented conclusions can be drawn under which conditions silicates of the rhodesite family can be formed in nature or synthesized in the laboratory. The following conditions are expected to be prerequisite:

(i) Temperature and pressure have to be in approximately the same range as for zeolite formation.

(ii) The ratio $(SiO_2 + Al_2O_3):M_mO_n$ (M = A-, B-, C-, E-site cations) has to be in the same range as/or slightly lower than for zeolite formation.

(iii) The ratio $SiO_2:Al_2O_3$ should be at least as high as for zeolite formation.

(iv) A combination of at least two different M cations has to be available where the M cations have to fulfill the conditions listed above for the A-, B-, C- and E-site cations.

Since a series of cations fulfill these requirements for the M cations and since during late stages of highly siliceous volcanic crystallization not seldom conditions (i) to (iv) can be reached, it can be assumed that the

known members of the rhodesite family are more common than is believed today and that the discovery of new members of this interesting family is to be expected.

Acknowledgements. K.-F. Hesse and F. Liebau are greatly indebted to H. Jakob, Stegaurach, for the donation of the crystals of Zeilberg rhodesite, S. Merlino to Gianni Porcellini who provided the crystals of S. Venanzo rhodesite and to the colleagues of Centro di Cristallografia Strutturale (C.N.R.), Pavia, for their help in the intensity data collection. We are also grateful to D. Ackermand, Kiel, for making the microprobe analyses.

References

Alfors, J. T., Stinson, M. C., Matthews, R. A., Pabst, A.: Seven new barium minerals from Eastern Fresno County, California. Am. Mineral. **50** (1965) 314–340.

Brown, I. D., Altermatt, D.: Bond-valence parameters obtained from systematic analysis of the inorganic crystal structure database. Acta Crystallogr. **B41** (1985) 244–247.

Cannillo, E., Rossi, G., Ungaretti, L.: The crystal structure of macdonaldite. Rend. Acc. Naz. Lincei Classe Sc. Fis. Mat. Nat., Serie 8, **45** (1968) 399–414.

Cannillo, E., Rossi, G., Ungaretti, L.: The crystal structure of delhayelite. Rend. Soc. Ital. Mineral. Petrol. **26** (1970) 63–75.

Chao, G. Y.: The crystal structure of carletonite, $KNa_4Ca_4Si_8O_{18}(CO_3)_4(F, OH) \cdot H_2O$, a double-sheet silicate. Am. Mineral. **57** (1972) 765–778.

Chao, G. Y., Harris, D. C., Hounslow, A. W., Mandarino, J. A., Perrault, G.: Minerals from the nepheline syenite, Mont St. Hilaire, Quebec. Can. Mineral. **9** (1967) 109–123.

Cromer, D. T., Mann, J. B.: X-ray scattering factors computed from numerical Hartree-Fock wave functions. Acta Crystallogr. **A24** (1968) 321–324.

Gard, J. A., Taylor, H. F. W.: An investigation of two new minerals: rhodesite and mountainite. Mineral. Mag. **31** (1957) 611–623.

Ghose, S., Sen Gupta, P. K., Campana, C. F.: Symmetry and crystal structure of montregianite, $Na_4K_2Y_2Si_{16}O_{38} \cdot 10\,H_2O$, a double-sheet silicate with zeolitic properties. Am. Mineral. **72** (1987) 365–374.

Hesse, K.-F.: Verfeinerung der Struktur des Rhodesits, $H_2K_2Ca_4Si_{16}O_{38} \cdot 10\,H_2O$. Z. Kristallogr. **178** (1987) 98–99.

Hornstra, I., Vossers, H.: Das Philips Einkristalldiffraktometer. Philips Tech. Rundsch. **33** (1973/74) Nr. 3, 65–78.

International Tables for X-ray Crystallography, Vol. III. Kynoch Press, Birmingham (1962).

International Tables for X-ray Crystallography, Vol. IV. Kynoch Press, Birmingham (1974).

Jakob, H.: Rhodesit im Basalt des Zeilbergs bei Maroldsweisach. Aufschluß **27** (1976) 57–58.

Liebau, F.: *Structural Chemistry of Silicates*. Springer-Verlag, Heidelberg 1985.

Lima-de-Faria, J., Hellner, E., Liebau, F., Makovicky, E., Parthé, E.: Nomenclature of inorganic structure types. Report of the IUCr Commission on Crystallographic Nomenclature of Inorganic Structure Types. Acta Crystallogr. **A46** (1990) 1–11.

Midgley, H. G.: A quick method of determining the density of liquid mixtures. Acta Crystallogr. **4** (1951) 565.

Mountain, E. D.: Rhodesite, a new mineral from the Bultfontein mine, Kimberley. Mineral. Mag. **31** (1957) 607–610.

Ragimov, K. G., Chiragov, M. I., Mamedov, K. S., Dorfman, M. D.: Crystal structure of hydrodelhayelite, $KH_2Ca(Si,Al)_8O_{19} \cdot 6H_2O$. Dokl. Akad. Nauk Azerbaid. SSR **36** (1980) 49–51.

Sahama, T. G., Hytönen, K.: Delhayelite, a new silicate from Belgian Congo. Mineral. Mag. **32** (1959) 6–9.

Shannon, R. D., Prewitt, C. T.: Revised effective ionic radii and systematic studies of interatomic distances in halides and chalcogenides. Acta Crystallogr. **A 32** (1976) 751–767.

Sheldrick, G. M.: SHELX-76, program for crystal structure determination. Cambridge University (1976).

Sheppard, R. A., Gude, A. J.: Rhodesite from Trinity County, California. Am. Mineral. **54** (1969) 251–255.

Stewart, J. M.: The X-ray 70 System. Computer Science Center, University of Maryland, College Park, Maryland.